Board of Commissioners Agenda

September 12, 2023

Nicollet County Government Center Board Room • 501 South Minnesota Avenue, St. Peter, MN 56082

Commissioners: Jack Kolars - Board Chair; Terry Morrow - Vice Chair; Marie Dranttel; Mark Dehen; Kurt Zins

9:00 a.m. **Call Board of Commissioners Meeting to Order: Chair**

1. Pledge of Allegiance
2. Silence Your Cell Phones
3. Approval of Agenda
4. Approval of Consent Agenda:
   a. August 22, 2023 Board Minutes
   b. Joint Powers Agreement with MN River Valley Drug Task Force
   c. Juvenile Work Crew Contract with Blue Earth County
   d. Out of State Travel Request: County Attorney's Office
   e. Out of State Travel Request: USA Clubhouse Conference
   f. Out of State Travel Request: 38th Annual Local Roads Conference
   g. End of Probations
   h. Approval of Bills
5. Public Appearances

9:05 a.m.

6. Property Services
   a. August 21, 2023 Planning and Zoning Advisory Commission Meeting
      - PLN23-07 Peters Family LLLP

9:10 a.m.

7. Administration
   a. Consideration of the AIA Document B132-2019 with Vetter Johnson Architects, Inc.
   b. Dissolution of the Brown-Nicollet Community Heath Board Joint Powers Agreement

9:25 a.m.

8. County Attorney
   a. Victim/Witness Coordinator Grant Renewal

9:30 a.m.

9. Chair's Report
10. Commissioner Committee Reports, Meetings & Conferences
11. Approve Per Diems and Expenses
12. Adjourn Board of Commissioners Meeting

9:35 a.m. **Call Drainage Authority Meeting to Order: Chair**

1. Approval of Agenda
2. Approval of Consent Agenda
   a. August 22, 2023 Drainage Authority Minutes
3. Public Appearances

Mission Statement	Vision Statement	Core Values
Providing efficient services with innovation and accountability.	Setting the standard for providing superior and efficient county government services through leadership, accountability and innovation to a growing and diverse society.	Leadership. Integrity. Accountability. Efficiency. Innovation.

Board of Commissioners Agenda

September 12, 2023

Nicollet County Government Center Board Room • 501 South Minnesota Avenue, St. Peter, MN 56082

Commissioners: Jack Kolars - Board Chair; Terry Morrow - Vice Chair; Marie Dranttel; Mark Dehen; Kurt Zins

9:40 a.m. 4. Public Works
   a. Status Update for CD 83 – Hippert Driveway Relocation Project

9:50 a.m. 5. Public Services
   a. CD 30A and CD 32A Cleaning Request

10:15 a.m. 6. Adjourn Drainage Authority Meeting

Notice of Scheduled Meetings

The following is a notice of scheduled meetings. Pursuant to Minnesota Statute 13D.04, this notice of meetings also serves as notice of regular and special meetings of the Nicollet County Board of Commissioners. Questions or comments regarding Nicollet County meetings and requests to participate can be directed to Mandy Landkamer, Nicollet County Administrator, at 507-934-7074 or mandy.landkamer@co.nicollet.mn.us.

Date	Time	Meeting	Location	City & State
September 12	9:00 am	County Board of Commissioners Meeting	Gov. Center – Board Room	St. Peter, MN
September 12	*following Board adjournment	Drainage Authority Meeting	Gov. Center – Board Room	St. Peter, MN
September 12	10:30-12:30 pm	Budget Workshop #3	Gov. Center – Board Room	St. Peter, MN
September 13	10:15-11:00	Personnel Committee Meeting	Gov. Center – Nicollet Room	St. Peter, MN
Sept. 13-15	All Day	AMC Fall Policy Conference	Arrowwood Conference Center	Alexandria, MN
September 18	7:00 pm	Planning & Zoning Advisory Commission/ Board of Adjustments & Appeals	Gov. Center – Board Room	St. Peter, MN
September 19	8:15 am	Individual DH Meeting – County Attorney	Gov. Center – Board Room	St. Peter, MN
September 19	9:30 am	Board Workshop	Gov. Center – Board Room	St. Peter, MN
September 19	*6:00 pm (note earlier time)	Planning & Zoning Advisory Commission/ Board of Adjustments & Appeals – *Hearing Continuance*	Gov. Center – Board Room	St. Peter, MN
September 22	8:15 am	BNCH Full Board Meeting	1900 Franklin St.	New Ulm, MN
September 26	9:00 am	County Board of Commissioners Meeting	Gov. Center – Board Room	St. Peter, MN
September 26	*following Board adjournment	Drainage Authority Meeting	Gov. Center – Board Room	St. Peter, MN

AUGUST 22, 2023
OFFICIAL PROCEEDINGS OF THE
BOARD OF COUNTY COMMISSIONERS

The Nicollet County Board of Commissioners met in regular session on Tuesday, August 22, 2023, at 9:00 a.m. Present at the meeting were Commissioners Jack Kolars, Marie Dranttel, Mark Dehen, and Kurt Zins. Commissioner Morrow was present via Zoom. Also present were County Administrator Mandy Landkamer, County Attorney Michelle Zehnder Fischer and Recording Secretary Sarah Frahm.

Approval of Agenda

Motion by Commissioner Dehen and seconded by Commissioner Dranttel to approve the agenda. Motion carried with all voting in favor on a roll call vote.

Consent Agenda

Motion by Commissioner Dehen and seconded by Commissioner Zins to approve the consent agenda items as follows:

1. August 8, 2023 Board Minutes
2. End of Probations
3. Approval of Bills
4. Acknowledgment of the Auditor's Warrants and approval of the Commissioner Warrants as presented for the following amounts:
    a. General Revenue Fund - $144,295.55;
    b. Road & Bridge Fund - $76,451.35;
    c. Human Services Fund - $236,316.79;

Motion carried with all voting in favor on a roll call vote.

Public Appearances:

There were no public appearances.

Sheriff's Office

Body Worn Camera Public Comment Meeting

Sheriff Lange and Chief Deputy Petersen came before the Board to discuss implementation of the Body Worn Camera policy. The floor was opened for public comments at 9:16 a.m. No comments were received and the public comment period was closed.

Sheriff Lange stated that the intent of body cameras is to capture detailed interactions between deputies and members of the public. The additional audio and visual details provided by body cameras will increase the safety and transparency of public safety interactions. Data will be kept in secured storage within the Sheriff's Office and information will be retained according to retention standards. Attorney Zehnder Fischer shared that body cameras will also help provide additional evidence in investigations.

County Attorney Update:

Attorney Zehnder Fischer started off by thanking Nicollet County staff and Commissioners in their fundraising efforts for the Backpack program. Enough money was raised to put together backpacks for 618 children in the area. In addition, the Attorney's Office was present at the Nicollet County fair to share information on fraud prevention. Staff also

DRAFT

participated in the Nicollet Night Out and Project Community Connect events last week. Finally, the Attorney's office received a competitive grant to fund a portion of the Victim Witness program, which helps crime victims navigate the often complex judicial system.

Chair's Report

- County Board
- Board Workshop
- Budget Committee
- Personnel Committee
- Nicollet County Fair
- City of St. Peter & N. Mankato Joint Meeting
- Diversity Council
- Traverse de Sioux Board Meeting

Commissioner Committee Reports:

Commissioner Terry Morrow

- Nicollet County Fair
- County Board
- Board Workshop

Commissioner Marie Dranttel

- Nicollet County Fair
- County Board
- Board Workshop
- Personnel meeting
- Department Head
- VINE Transit Joint Powers
- BNCH Budget meeting
- Planning & Zoning Commission

Commissioner Mark Dehen

- Nicollet County Fair
- County Board
- Board Workshop
- REDA
- MRCI Annual Awards dinner
- ACWA booth @ Fair
- SCHASC meeting
- Cookies with a Congressman

Commissioner Kurt Zins

- Nicollet County Fair
- County Board
- Board Workshop

DRAFT

Approve Per Diems and Expenses

Motion by Commissioner Zins and seconded by Commissioner Dehen to approve the expenses and per diems for the meetings noted above during the Commissioner Reports and/or as submitted on approved expense reports, and authorize payment of those expenses and per diems by the Finance Office. Motion carried with all voting in favor on a roll call vote.

Adjourn

Chair Kolars adjourned the meeting at 9:25 a.m.

_____
JACK KOLARS, CHAIR
BOARD OF COMMISSIONERS

ATTEST:

_____
MANDY LANDKAMER,
CLERK TO THE BOARD

DRAFT

Nicollet County Board of Commissioners
Board Meeting Agenda Item

Agenda Item:
Joint Powers Agreement with MN River Valley Drug Task Force

Primary Originating Division/Dept.: Sheriff's Office

Contact: Dave Lange Title: Sheriff

Amount of Time Requested: minutes

Presenter: Dave Lange Title: Sheriff

Meeting Date: 09/12/2023

Item Type: (Select One) Consent Agenda

Attachments: ◉ Yes ○ No

County Strategy: (Select One) Programs and Services - deliver value-added quality services

BACKGROUND/JUSTIFICATION:

Annual renewal of Joint Powers Agreement with Drug Task Force needing Board Chair signature

Supporting Documents: ◉ Attached ○ In Signature Folder ○ None

Prior Board Action Taken on this Agenda Item: ◉ Yes ○ No

If "yes", when? (provide year; mm/dd/yy if known)

Approved by County Attorney's Office: ○ Yes ○ No ◉ N/A

ACTION REQUESTED:

Need County Board Chair signature on signature page

FISCAL IMPACT: Other
(Select One)

If "Other", specify:

FTE IMPACT: No FTE change
(Select One)

If "Increase or "Decrease," specify:

Related Financial/FTE Comments:

FUNDING
County Dollars =

State
(Select One)

Total:

MINNESOTA RIVER VALLEY DRUG TASK FORCE
JOINT POWERS AGREEMENT

This Joint Powers Agreement is made by and between the political subdivisions organized and existing under the Constitution and laws of the State of Minnesota, hereafter collectively referred to as "Parties," and individually as "Party" which are signatories to this "Agreement." This Agreement supersedes any Joint Powers Agreements or amendments effective prior to the date of this Agreement. This Agreement is effective as of the date all ten participating Parties Members have executed this Agreement.

In consideration of the mutual promises and covenants contained herein, and subject to the provisions of Minn. Stat. § 471.59 the following Parties:

Cities	Counties
City of Mankato	Blue Earth County
City of North Mankato	Martin County
City of St. James	Watonwan County
City of St. Peter	Nicollet County
City of Madelia	
City of Fairmont	

Also referred to herein as "Participating Member(s)" hereto agree as follows:

1. PURPOSE: The purpose of this Agreement is to provide law enforcement resources for narcotics law enforcement in the jurisdictions of the Participating Members which are party to this Agreement. The Parties recognize that there are benefits for a coordinated Task Force approach for narcotics law enforcement, and to share in resources.
2. METHOD: The Minnesota River Valley Drug Task Force ("Task Force") is a group of law enforcement officers working together under the direction of the Board of Directors for the purpose of narcotics laws enforcement within the boundaries of the Participating Members to this agreement.

   Any peace officer assigned to or working with this Task Force is hereby deputized by the governing body of the Participating Member that they enter pursuant to this Agreement for the period of time that they are operating pursuant to and under the authority of this Agreement.

   Law enforcement officers may enter the territory of a Participating Member with full police powers in the following circumstances and under the following conditions:

   A. Any investigation relating to the narcotics enforcement mission of the Task Force.

   B. Any investigation relating to a crime in progress or criminals in flight observed by a peace officer assigned to or working with the Task Force.

3. BOARD OF DIRECTORS: The Minnesota River Valley Drug Task Force shall be governed by a Board of Directors. The Board of Directors shall consist of the Sheriff or Chief of Police of each Participating Member or a substitute law enforcement officer designated by the Sheriff or Chief of Police to serve in his/her place. Each board member shall have one vote. A prosecuting attorney appointed by the Blue Earth County Attorney shall also be a Board member and shall have one vote.

4. RECEIPT OF FORFEITURE ASSETS: All assets generated through seizure/forfeiture in narcotics law enforcement cases conducted by Task Force officers or Participating Members shall be forwarded to the Task Force and shall remain the property of the Task Force until such time as the entire Task Force is dissolved. Such forfeited assets shall be forwarded to the Task Force whether derived from an investigation by Task Force officer, by Task Force officers in conjunction with other law enforcement agencies, or by law enforcement agencies of Participating Members acting independently of Task Force officers.

5. DISTRIBUTION OF FORFEITURE FUNDS: Any asset seizures related to Task Force investigation that results in state court-ordered forfeitures must be disbursed according to Minnesota Statute 609.5315, Subd. 5:

> **Minnesota Statute 609.5315, Subd. 5: Distribution of Money. The money or proceeds from the sale of forfeited property, after payment of seizure, storage, forfeiture, and sale expenses, and satisfaction of valid liens against the property must be distributed as follows:**
>
> **A. 70 percent of the money proceeds must be forwarded to the appropriate property agency for deposit as a supplement to the agency's operating fund or similar fund for the use in law enforcement,**
>
> **B. 20 percent of the money or proceeds must be forwarded to the county attorney or other prosecuting agency that handled the forfeiture for deposit as a supplement to it's operating fund or similar fund for prosecutorial purposes, and**
>
> **C. the remaining ten percent of the money or proceeds must be forwarded within 60 days after resolution of the forfeiture to the state treasury and credited to the general fund. Any local police relief association organized under Chapter 423 which received or was entitled to receive the proceeds of any sale made under this section before the effective date of Laws 1988, Chapter 665, Sections 1 to 17, shall continue to receive and retain the proceeds of these sales.**

Under this section, three (3) checks shall be written. The check to the State Treasurer should be sent to:

TREASURER'S OFFICE
303 SHERBURNE AVE.
ST. PAUL, MN 55155

And contain reference to Minnesota Statute 609.5315, Subd. 5.

The remaining checks shall be written and delivered to the appropriate law enforcement and prosecuting agency.

6. DEFEND AND INDEMNIFY: The Task Force shall fully defend, indemnify and hold harmless the Parties against all claims, losses, liability, suits, damages, judgments, costs and expenses, or lawsuits for damages arising from or related to the acts of the Task Force members and their agents in the performance of the duties contemplated by this Agreement, or by reason of the action or inaction of the Board and/or employees and/or the agents of the Task Force. This Agreement to indemnify and hold harmless does not constitute a waiver by any participant of limitations on liability provided under Minnesota States Statutes, Section 466.04.

To the full extent permitted by law, actions by the parties pursuant to this Agreement are intended to be and shall be construed as a "cooperative activity" and it is the intent of the parties that they shall be deemed a "single governmental unit" for the purposes of liability, all as set forth in Minnesota Statutes, Section 471.59, subd. 1a(b).

Nothing herein shall be construed to provide insurance coverage or indemnification to an officer, employee, or volunteer of any member for any act or omission for which the officer, employee, or volunteer is guilty of malfeasance in office, willful neglect of duty or bad faith.

Each Participating Member shall be responsible for damages to or loss of its own equipment. Each Participating Member waives the right to, and agrees that it will not, bring any claim or suit against the Task Force or any other Participating Member for damages to or loss of its equipment arising out of participation in or assistance with Task Force operations or activities, even if the damages or losses were caused wholly or partially by the negligence of any other Participating Members of its officers, agents, employees, or volunteers.

The Parties of this Agreement are not liable for the acts or omissions of the other participants to this Agreement except to the extent to which they have agreed in writing to be responsible for acts or omissions of the other Parties.

However, the parties other than the appointed jurisdiction that serves as fiduciary responsibilities agree to save and hold harmless the jurisdiction and its officers, agents, employees, and members, from all claims, suits, or actions of whatsoever nature resulting from or arising out of any failure by the other parties or their subcontractors, agents, or employees to comply with any restrictions placed on use of funds by any governmental entity which are disbursed to them by the jurisdiction pursuant to this agreement.

Under no circumstances shall a Participating Member be required to pay on behalf of itself or other Participating Members, any amount in excess of the limits of liability established in Minn. Stat. Chapter 466, applicable to any third party claim or action. The

statutory limits of liability for some, or all, of the Participating Members may not be added together or stacked to increase the maximum amount of liability for any third party claim or action.

7. EXPENDITURES: Any expenditure over $1,500.00 requires approval of the Board of Directors, and any narcotics "buy" over $1,000.00 requires prior approval of the Task Force Commander.

8. FISCAL AGENT: The County of Blue Earth shall serve as fiscal agent. The Blue Earth County Sheriff will serve as the authorized signatory for any official documents, financial records, grant documents, etc., as approved by Board of Directors. The finance director for Blue Earth County shall receive and disburse funds and keep financial records. As fiscal agent, Blue Earth County is authorized to initiate civil court actions, at the request of the Board of Directors, in furthering of Task Force goals.

9. SUPERVISION: The day-to-day supervision of the Task Force shall be provided by a Task Force Commander who is appointed by majority vote of the Board of Directors.

   The Task Force Commander assigned to the Minnesota River Valley Drug Task Force will act as the daily coordinator of the Task Force officers and agents assigned from Participating Members.

   Duties of the Task Force Commander will include:

   A. Provide effective leadership and administrative coordination of the Minnesota River Valley Drug Task Force.
   B. Direct officer/agent assignments and manpower as necessary on a daily basis for given investigations.
   C. Direct field operations.
   D. Strengthen communications and cooperation with other law enforcement agencies in and outside of the geographic region.
   E. Provide effective training programs for participating personnel, the costs of which shall be absorbed by the Participating Member employing the officer in question with prior approval from the officer's employer.
   F. Act as a liaison with the Command Staff as well as Investigative Divisions of all Participating Members concerning significant case developments, overtime, disciplinary problems, and other performance.

10. PERSONNEL:

   A. Each Participating Member is responsible for providing its respective personnel with salaries, benefits, and overtime in accordance with FLSA regulations and departmental policy.
   B. Each Participating Member of the Minnesota River Valley Drug Task Force shall be responsible for acts of its participating officers/agents and shall incur any liabilities arising out of the service and activities of those officers while participating in the Minnesota River Valley Drug Task Force. Personnel assigned

to the Minnesota River Valley Drug Task Force shall have the same duties, powers, privileges, responsibilities, immunities, and jurisdictions as conferred upon them as officers of their own jurisdictions.

C. Temporary recall of personnel and/or equipment by a Participating Member will be coordinated with the Task Force Commander.

D. A two-year or longer assignment of personnel is preferred.

E. All personnel assigned to the Minnesota River Valley Drug Task Force shall be coordinated by the Task Force Commander and shall be subject to the directive of that Commander regardless of position or rank in their respective agencies.

F. Management from Participating Member, with the input of the Minnesota River Valley Drug Task Force, will handle all actions of a disciplinary nature concerning law enforcement personnel from their Participating Member.

G. Each Participating Member will maintain workers' compensation insurance or self-insurance coverage, covering its own personnel while they are assigned to the Task Force or are otherwise participating in or assisting with Task Force operations or activities. Each Participating Member waives the right to, and agrees that it will not, bring any claim or suit against the Task Force or any other Participating Member for any worker's compensation benefits paid to its own employee or dependents, that arise out of participation in or assistance with Task Force operations or activities, even if the injuries were caused wholly or partially by the negligence of any other Participating Member or its officers, agents, employees, or volunteers.

11. EQUIPMENT: The Task Force or the Participating Member will provide all equipment needed for the operation of the Minnesota River Valley Drug Task Force. In the event of negligence by a Task Force employee, the individual employee and/or Participating Member may be responsible for the repair or replacement of the equipment. Vehicles assigned to the Task Force officers will be provided by the Task Force. Insurance for these vehicles will be the responsibility of the Participating Member providing the Task Force officer. Participating Members are expected to properly equip officers/agents assigned to the Minnesota River Valley Drug Task Force with equipment necessary to complete the effective investigations and safe enforcement operations.

12. REPORTS: Officers assigned to the Minnesota River Valley Drug Task Force will use Task Force specific report forms for supplemental reports. The Task Force Commander will develop an annual report that will be sent to all Participating Members in the Task Force.

13. MEDIA: All media releases concerning arrests and investigations conducted by the Minnesota River Valley Drug Task Force shall be coordinated by the Task Force Commander and the chief of police or sheriff of the Participating Members.

14. FUNDING: Each Participating Member agrees to provide whatever resources are agreed to in a yearly proposal to be set by the Board. Those resources may be personnel and/or financial in nature and are designed to assist in the operation of the Task Force. Resources may also be provided in kind (e.g. furnishing office space) at the discretion of the Board of Directors. The Task Force fiscal agent at this time is Blue Earth County.

They shall be charged with the responsibility of keeping all financial records, filing required reports in connection with any grant funding, and complying with any required or requested financial audits.

15. TERMINATION: Any Participating Member may terminate the terms of this agreement by giving thirteen (13) months' written notice to the other Participating Members. Notice of intent to terminate this Agreement must be given no later than December 1 of the year proceeding the year of designated termination.

16. DISSOLUTION: The Task Force may be dissolved by majority vote of the Board of Directors. Any Task Force assets shall be divided among the Participating Members in the Task Force at the time of dissolution. Distribution will be based on populations of Participating Members. (Simplified example: If Task Force assets are $100,000.00 and combined populations of Participating Members is 100,000, and Mankato population is 30,000 and Blue Earth County is 30,000 not counting the City of Mankato, then Mankato receives $30,000.00 and Blue Earth County receives $30,000.00, etc.) Non-liquid asset values shall be determined by the fiscal agent.

17. INSURANCE: The Task Force shall obtain and maintain liability insurance and the liability insurance must be consistent with the risk exposure of the Task Force under the state tort liability limits found in Chapter 466 of the Minnesota Statutes.

18. AMENDMENTS: This agreement may be amended only in writing and upon the consent of the governing bodies of all of the Participating Members.

19. COUNTERPARTS: This Agreement may be executed in two or more counterparts, each of which shall be an original, but all of which shall constitute one and the same instrument. Counterparts shall be filed with the fiscal agent.

20. RECORDS, ACCOUNTS AND REPORTS: The books and records of the Minnesota River Valley Drug Task Force shall be subject to the provisions of Minn. Stat. Ch. 13 and Minn. Stat. § 16C.05, Subd. 5.

21. Each signer certifies that the governing body of the Participating Member which they represent has passed a resolution authorizing entry into this Joint Exercise of Powers Agreement and that the signer has the authority to execute this Agreement on behalf of the Participating Member.

Participating Cities:

_____ Date: _____
City of Mankato Director of Public Safety

_____ Date: _____
Mankato City Manager

_____ Date: _____
City of North Mankato Chief of Police

_____ Date: _____
North Mankato City Administrator

_____ Date: _____
City of St. James Chief of Police

_____ Date: _____
St. James Mayor

_____ Date: _____
City of St. Peter Chief of Police

_____ Date: _____
St. Peter City Administrator

_____ Date: _____
City of Madelia Chief of Police

_____ Date: _____
Madelia City Administrator

_____ Date: _____
City of Fairmont Chief of Police

_____ Date: _____
Fairmont City Administrator

Participating Counties:

_____ Date: _____
Blue Earth County Sheriff

_____ Date: _____
Blue Earth County Board Chair

_____ Date: _____
Martin County Sheriff

_____ Date: _____
Martin County Board Chair

_____ Date: _____
Watonwan County Sheriff

_____ Date: _____
Watonwan County Board Chair

_____ Date: _____
Nicollet County Sheriff

_____ Date: _____
Nicollet County Board Chair

Nicollet County Board of Commissioners
Board Meeting Agenda Item

Agenda Item:
Juvenile Work Crew Contract with Blue Earth County

Primary Originating Division/Dept.: Community Corrections

Contact: Rich Molitor Title: Director

Amount of Time Requested: minutes

Presenter: Rich Molitor Title: Director

Meeting Date: 09/12/2023

Item Type: (Select One) Consent Agenda

Attachments: ◉ Yes ○ No

County Strategy: (Select One) Programs and Services - deliver value-added quality services

BACKGROUND/JUSTIFICATION:

Renewing juvenile work crew contract with Blue Earth County for a period of one year.

Supporting Documents: ◉ Attached ○ In Signature Folder ○ None

Prior Board Action Taken on this Agenda Item: ◉ Yes ○ No

If "yes", when? (provide year; mm/dd/yy if known) October 2022

Approved by County Attorney's Office: ◉ Yes ○ No ○ N/A

ACTION REQUESTED:

Signature of Contract

FISCAL IMPACT: Other
(Select One)

If "Other", specify:

FTE IMPACT: No FTE change
(Select One)

If "Increase or "Decrease," specify:

Related Financial/FTE Comments:

FUNDING
County Dollars =

State
(Select One)

Total:

NICOLLET COUNTY COMMUNITY CORRECTIONS AGREEMENT

This contract is between the County of Nicollet, on behalf of Nicollet County Community Corrections [hereafter "Nicollet County Community Corrections"], Nicollet County Government Center, 501 South Minnesota Avenue, St. Peter, MN 56082 and the County of Blue Earth on behalf of Blue Earth County Community Corrections [hereafter "Purchaser"], Blue Earth County Justice Center, 401 Carver Road, Mankato, MN 56001.

Recitals

1. The Nicollet County Community Corrections is empowered to enter into income contracts as part of their cooperation of services. The Purchaser has requested participation in a contract with Nicollet County Community Corrections.
2. The Purchaser is in need of a juvenile community work service program for offenders ordered to perform community work service.
3. The Nicollet County Community Corrections represents that it is duly qualified and agrees to provide the services described in this contract.

Contract

1 Term of Contract

1.1 ***Effective date:*** January 1, 2024, or the date Nicollet County Community Corrections obtains all required signatures, whichever is later.

1.2 ***Expiration date:*** December 31, 2024, or until all obligations have been satisfactorily fulfilled, whichever occurs first.

2 Nicollet County Community Corrections Duties

Nicollet County Community Corrections will:

2.1 Provide one crew leader who will supervise up to eight (8) offenders, a mixture of Nicollet County and Purchasers county offenders, each approximately 24 hours per week, including the hours the crew leader spends for daily preparation and communication.

2.2 Submit reports to Purchaser within 30 days of the end of each quarter, which shall include the following information:

a. Total number of offenders served in Purchaser County and Nicollet County – calculated separately
b. Total number of offenders completing community work service obligations in Purchaser County and Nicollet County – calculated separately
c. Number of offenders unsuccessfully discharged from Purchaser County and Nicollet County – calculated separately
d. Total number of hours worked by offenders in Purchaser County and Nicollet County – calculated separately
e. Description of work completed

2.3 Train each crew member in safety principles and techniques relevant to the work being done.

2.4 Screen projects to ensure that they meet community work service guidelines.

2.5 Nicollet County Community Corrections will provide the crew leader, van, and equipment needed to perform community service work hours.

2.6 Nicollet County Community Corrections will transport the offenders to community work service sites from pre-approved pickup and drop-off locations.

2.7 Community work service projects will be performed in Nicollet County, Blue Earth County, and other approved work sites.

2.8 Nicollet County's crew leader will communicate with the Nicollet County Community Corrections Director, Nicollet County's and Blue Earth County's referring agents as to the progress of the community work service offenders.

2.9 All Nicollet County and Purchasers' participants will abide by the rules and regulations of the Nicollet County Community Work Service Program and all directives of the Nicollet County crew leader.

2.10 The offenders can be discharged from the Nicollet County Community Work Service Program in the sole discretion of the crew leader, Nicollet County Community Corrections Director, or Blue Earth County Community Corrections agents'.

2.11 It is the obligation of the participant to contact both the Nicollet County Community Work Service crew leader, as well as the participant's Nicollet County or Purchaser agent, prior to any excused absence from a pre-arranged work date.

3 Payment

The Purchaser will pay the Nicollet County Community Corrections for all services performed by the Nicollet County Community Corrections under this contract as follows:

3.1 The total obligation of the Purchaser for all compensation and reimbursements to the Nicollet County Community Corrections under this contract is not to exceed $3,000.00 per year as its share of the cost of providing a crew leader and placing the work crews into service on the Community Work Service Program during the term of this agreement.

3.2 Terms of payment: Payment shall be made by the Purchaser to the Nicollet County Community Corrections as follows:

Payment	Pay on or before. . .
$750.00	March 1, 2024
$750.00	June 1, 2024
$750.00	September 1, 2024
$750.00	December 1, 2024

Payment will be made no later than the 23rd day following the last day of the billing period.

The total obligation of the Purchaser for all compensation and reimbursements to Nicollet County Community Corrections under this agreement is not to exceed $3,000.00 per year, unless agreed upon by both Nicollet County Community Corrections Director and Blue Earth County Community Corrections Director, and affirmed by the County Commissioners.

4 Authorized Representatives

Nicollet County's Authorized Representative is:	The Purchaser's Authorized Representative is:
Rich Molitor, Director Nicollet County Community Corrections Nicollet County Government Center 501 South Minnesota Ave. St. Peter, MN 56082 Rich.Molitor@co.nicollet.mn.us	John Marsolek, Director Blue Earth County Community Corrections PO Box 3543 Mankato, MN 56002 John.Marsolek@co.blue-earth.mn.us

5 Amendments, Waiver, and Contract Complete

5.1 ***Amendments:*** Any amendment to this agreement must be in writing and will not be effective until it has been executed and approved by the same parties who executed and approved the original agreement, or their successors in office.

5.2 ***Waiver***: If Nicollet County Community Corrections fails to enforce any Provision of this agreement, that failure does not waive the provision or its right to enforce it.

5.3 ***Contract Complete:*** This contract contains all negotiations and agreements between Nicollet County, Nicollet County Community Corrections and the Purchaser, Blue Earth County Community Corrections. No other understanding regarding this agreement, whether written or oral, may be used to bind either party.

6 Liability

Each party will be responsible for its own acts and behavior and the results thereof. Purchaser agrees that it shall indemnify and hold harmless Nicollet County Community Corrections from any claims arising under the execution, or implementation of this contract.

7 Government Data Practices

The Purchaser must comply with the Minnesota Government Data Practices Act, Minnesota Statute, Chapter 13, as it applies to all data provided by Nicollet County Community Corrections under this contract. The civil remedies of Minnesota Statute § 13.08 apply to the release of the data referred to in this clause by either the Purchaser or Nicollet County Community Corrections.

If the Purchaser receives a request to release the data referred to in this Clause, the Purchaser must immediately notify Nicollet County Community Corrections. The Nicollet County Community Corrections will give the Purchaser instructions concerning the release of the data to the requesting party before the data is released.

8 Publicity

Any publicity regarding the subject matter of this contract must not be released without prior written approval from the Nicollet County Community Corrections' Authorized Representative.

9 Audit

Under Minnesota Statute § 16C.05, subd. 5, the Purchaser's books, records, documents, and accounting procedures and practices relevant to this contract are subject to examination by the Nicollet County Community Corrections and/or the State Auditor or Legislative Auditor, as appropriate, for a total of six years.

10 Governing Law, Jurisdiction, and Venue

Minnesota law, without regard to its choice-of-law provisions, governs this contract. Venue for all legal proceedings out of this contract, or its breach, must be in the appropriate state or federal court with competent jurisdiction in Nicollet County, Minnesota.

11 Termination

Either party may terminate this agreement at any time, with or without cause, upon 30 days written notice to the other party. Should Purchaser terminate this contract, Nicollet County Community Corrections shall be entitled to payment for services provided to the date of termination, prorated.

_____	_____
Rich Molitor, Nicollet County Community Corrections Director	Date
_____	_____
Nicollet County Chair	Date
_____	_____
Nicollet County Board Clerk	Date
_____	_____
John Marsolek, Blue Earth County Community Corrections Director	Date
_____	_____
Blue Earth County Chair	Date
_____	_____
Blue Earth County Board Clerk	Date

Approved as to Form and Execution

_____	_____
Michelle Zehnder Fischer, Nicollet County Attorney	Date

Nicollet County Board of Commissioners
Board Meeting Agenda Item

Agenda Item:

Out of State Travel Request - County Attorney's Office

Primary Originating Division/Dept.: County Attorney's Office

Contact: Michelle Zehnder Fischer Title: County Attorney

Amount of Time Requested: 0 minutes

Presenter: Title:

Meeting Date: 09/12/2023

Item Type: (Select One) Consent Agenda

Attachments: ○ Yes ◉ No

County Strategy: (Select One) Programs and Services - deliver value-added quality services

BACKGROUND/JUSTIFICATION:

Nicollet County Attorney Michelle Zehnder Fischer will be participating in a panel presentation, sponsored by Fight Crime: Invest in Kids, to support quality early childhood education. The event will take place on September 20, 2023 in Washington DC. The trip is scheduled to take place from the evening of September 19 to the evening of September 20, 2023. There will be no cost to the County as a result of the participation in this event.

Supporting Documents: ○ Attached ○ In Signature Folder ◉ None

Prior Board Action Taken on this Agenda Item: ○ Yes ◉ No

If "yes", when? (provide year; mm/dd/yy if known)

Approved by County Attorney's Office: ◉ Yes ○ No ○ N/A

ACTION REQUESTED:

Approve out of state travel request

FISCAL IMPACT: Other (Select One)

If "Other", specify:

FTE IMPACT: No FTE change (Select One)

If "Increase or "Decrease," specify:

Related Financial/FTE Comments:

FUNDING

County Dollars = 0

State (Select One)

Total:

Nicollet County Board of Commissioners
Board Meeting Agenda Item

Agenda Item:
Out of State Travel Request: USA Clubhouse Conference

Primary Originating Division/Dept.: Health and Human Services

Contact: C. Sassenberg Title: HHS Director

Amount of Time Requested: minutes

Presenter: Title:

Meeting Date: 09/12/2023

Item Type: (Select One) Consent Agenda

Attachments: ○ Yes ◉ No

County Strategy: (Select One) Programs and Services - deliver value-added quality services

BACKGROUND/JUSTIFICATION:

HHS is requesting authorization for Melissa Plath and Kelly Miller, Lighthouse on Marshall Clubhouse staff, to attend the USA Clubhouse Conference training October 26-28 in Salt Lake City, Utah. This conference provides three days of learning about clubhouse best practices focused on the building blocks of the national clubhouse model, accessing funding streams, engaging and supporting young adults, leveraging partnerships, and impacting communities.

All costs associated with the conference, including but not limited to hotel stay, conference materials, workshops, meals, and flight will be fully funded by a mini grant from the South Central Community Based Initiative.

Supporting Documents: ○ Attached ○ In Signature Folder ◉ None

Prior Board Action Taken on this Agenda Item: ○ Yes ◉ No

If "yes", when? (provide year; mm/dd/yy if known)

Approved by County Attorney's Office: ○ Yes ○ No ◉ N/A

ACTION REQUESTED:

Approval for out of state travel.

FISCAL IMPACT: No fiscal impact
(Select One)

If "Other", specify: SCCBI mini grant

FTE IMPACT: No FTE change
(Select One)

If "Increase or "Decrease," specify:

Related Financial/FTE Comments:

FUNDING

County Dollars = $0

Grant Approx. $3,500
(Select One)

Total:

Nicollet County Board of Commissioners
Board Meeting Agenda Item

Agenda Item:
Consider Out of State Travel Request-38th Annual Local Roads Conference

Primary Originating Division/Dept.: Public Works-Highway Maintenance

Meeting Date: 09/12/2023

Contact: Seth Greenwood, P.E. Title: PWD/County Engineer

Item Type: (Select One) Consent Agenda

Amount of Time Requested: minutes

Presenter: Seth Greenwood, P.E. Title: PWD/County Engineer

Attachments: ◉ Yes ○ No

County Strategy: (Select One) Facilities and Space - preserve, maintain and build our assets

BACKGROUND/JUSTIFICATION:

The 38th Regional Local Roads Conference will be held October 23rd-25th in Sioux Falls, SD. The Local Roads Conference features speakers focused on the local road systems including gravel road topics, winter maintenance operations, rural road safety, equipment innovation, finding, training, and managing employees, working with the public, and elected officials, and more. This conference is developed through the collaboration of State Local Transportation Assistance Programs (LTAPs) from Montana, N. Dakota, S. Dakota, Wyoming, Nebraska, Iowa, Colorado, Kansas, and Missouri.

Mike Suska Assistant Public Works Director-Maintenance and Operations would be the Public Staff member attending if approved to do so.

Estimated cost of attend the conference would be (includes conference registration, hotel, and meals) $625.

Supporting Documents: ◉ Attached ○ In Signature Folder ○ None

Prior Board Action Taken on this Agenda Item: ◉ Yes ○ No

If "yes", when? (provide year; mm/dd/yy if known)

Approved by County Attorney's Office: ○ Yes ○ No ◉ N/A

ACTION REQUESTED:

Approve Out of State travel request for Mike Suska to attend the 38th Regional Local Roads Conference in Sioux Falls, South Dakota.

FISCAL IMPACT: Included in current budget
(Select One)

If "Other", specify:

FTE IMPACT: No FTE change
(Select One)

If "Increase or "Decrease," specify:

Related Financial/FTE Comments:

FUNDING
County Dollars = $625

State
(Select One)

Total: $625

38th Annual Local Road Conference

October 23 – 25, 2023

Denny Sanford Premier Center – Sioux Falls, SD

Monday, October 23, 2023

5:00 pm – 7:00 pm Kickoff – Vendor Sponsored Social and Exhibit Booth Visits – Exhibit Hall 1 & 2

Tuesday, October 24, 2023

Morning Moderator: Matt Ulberg

6:30 am – 7:45 am **Breakfast** (provided) – Exhibit Hall 1 & 2

8:00 am – 8:15 am **Welcome** – Paul TenHaken, Sioux Falls Mayor – Ballroom A

8:15 am – 9:00 am **Unbound Aggregate and Subgrade Density and Resilience Modulus** (Base and Subgrade Testing) – Andy Ayash, ND DOT – Ballroom A

9:00 am – 9:30 am **Mike Praul –** FHWA MCTC Manager Concrete Trailer/ Initiatives

9:30 am – 10:00 am **Innovation Champions** – Nöel Clocksin, Danielle Mathis-Lee, Leanna Emmer – Ballroom A

10:00 am – 10:45 am **Break** – Exhibit Booth Visits – Exhibit Hall 1 & 2

10:45 am – 11:45 am **Low Volume Roads Engineering –** Gordon Keller, Ballroom A

11:45 am – 1:00 pm **Lunch** (provided) – Exhibit Hall 1 & 2

Afternoon Moderator: ***Brian Keierleber***

1:00 pm – 2:00 pm **Lessons Learned as the Head Football Coach of SDSU** –
John Steigelmeier, Former SDSU Head Coach Ballroom A

2:00 pm – 2:45 pm **Gravel Road Research Test Track** – Brian Moore, Ballroom A

2:45 pm – 3:15 pm **Break** – Exhibit Booth Visits (Vendor meeting at 3:15 pm) – Exhibit Hall 1 & 2

3:15 pm – 3:45 pm **Stockpile Management** – Jared Nicolaus, Pete Lien – Ballroom A

3:45 pm – 4:30 pm **NRRA/MnROAD** – Ben Worel, Ballroom A

4:30 pm – 5:00 pm Smart Grid Technology – Tensar Corporation

5:00 pm – 7:00 pm Vendor Sponsored Social and Exhibit Booth Visits – Exhibit Hall 1 & 2

DRAFT

Wednesday, October 25, 2023

Morning Moderator: Scott Whaley

6:30 am – 7:45 am **Breakfast** (provided) – Exhibit Hall 1 & 2

8:00 am – 8:15 am **NACE Update** – Kevan Stone – Ballroom A

8:15 am – 8:45 am **Low Volume Road Safety** – Jon Jackels, SRF – Ballroom A

8:45 am – 9:30 am **Transportation Theater – Innovation Center** – Chad Weatherman, 3M, Ballroom A

9:30 am – 10:00 am **Break** – Final Exhibit Booth Visits – Exhibit Hall 1 & 2

10:00 am – 11:00 am **Winter Operations** – Mike Coffey, Envirotech – Ballroom A

11:00 am – 11:45 am **PANEL** – **Minor Structures – Small Structures – Culverts – Big Value** – Greg Vavra SDLTAP, Brian Keierleber Buchanan County, Iowa, Nick West P.E. Grand Forks County– Ballroom A

11:45 am Conference Wrap Up & Discussion

DRAFT

Nicollet County Board of Commissioners
Board Meeting Agenda Item

Agenda Item:

End of Probations

Primary Originating Division/Dept.: Human Resources

Meeting Date: 09/12/2023

Contact: Kristy Larson Title: HR Director

Item Type: (Select One) Consent Agenda

Amount of Time Requested minutes

Presenter: Kristy Larson Title: HR Director

Attachments: ○ Yes ◉ No

County Strategy: (Select One) Facilities and Space - preserve, maintain and build our assets

BACKGROUND/JUSTIFICATION:

Health & Human Services

Health & Human Services Director Cassie Sassenberg has requested the end of probation for Sarah Cloutier, Community Engagement Planner, effective August 15, 2023, and Sanjuana Acevedo, Interpreter/Administrative Support Technician, effective August 22, 2023.

Supporting Documents: ○ Attached ◉ In Signature Folder ○ None

Prior Board Action Taken on this Agenda Item: ◉ Yes ○ No

If "yes", when? (provide year; mm/dd/yy if known)

Approved by County Attorney's Office: ○ Yes ○ No ◉ N/A

ACTION REQUESTED:

Grant end of probationary status

FISCAL IMPACT: Other (Select One)

If "Other", specify

FUNDING

County Dollars =

Grant (Select One)

FTE IMPACT: No FTE change (Select One)

If "Increase or "Decrease" specify:

Total

Related Financial/FTE Comments:

Nicollet County Board of Commissioners
Board Meeting Agenda Item

Agenda Item:
August 21, 2023 Planning and Zoning Advisory Commission Meeting

Primary Originating Division/Dept.: PPSD -Property Services

Contact: Spencer Crawford Title: Deputy Zoning Administrator

Amount of Time Requested: 5 minutes

Presenter: Spencer Crawford Title: D.Z.A.

Meeting Date: 09/12/2023

Item Type: (Select One) Regular Agenda

Attachments: (•) Yes ( ) No

County Strategy: (Select One) Programs and Services - deliver value-added quality services

BACKGROUND/JUSTIFICATION:

Consideration of the attached Conditional Use Permit request and Findings of Fact document for the following item:

PLN23-07 Peters Family LLLP conditional use approval to construct and operate a 744 animal unit swine feedlot wean to finishing barn with an underfloor liquid manure storage area in the Agricultural Preservation Zoning District. The Planning Commission recommends approval with staff's recommended conditions.

Supporting Documents: (•) Attached ( ) In Signature Folder ( ) None

Prior Board Action Taken on this Agenda Item: ( ) Yes (•) No

If "yes", when? (provide year; mm/dd/yy if known)

Approved by County Attorney's Office: ( ) Yes ( ) No (•) N/A

ACTION REQUESTED:

Consideration of the attached Conditional Use Permit request and Findings of Fact for approval or denial.

FISCAL IMPACT: No fiscal impact
(Select One)

If "Other", specify:

FTE IMPACT: No FTE change
(Select One)

If "Increase or "Decrease," specify:

Related Financial/FTE Comments:

FUNDING
County Dollars =

State
(Select One)

Total:

PLANNING AND ZONING ADVISORY COMMISSION AGENDA

Date: August 21, 2023
Time: Following the adjournment of the Nicollet County Board of Adjustments and Appeals Meeting (doors open at 6:45)
Location: Nicollet County Board Room, 501 S. Minnesota Avenue, St. Peter, MN

Copies of the meeting agenda and packet are available on the Nicollet County website at: https://mn-nicolletcounty.civicplus.com/AgendaCenter

Questions or comments regarding the meeting can be directed to Spencer Crawford, Deputy Zoning Administrator, at 507-934-7071, or spencer.crawford@co.nicollet.mn.us.

1. Call to Order
2. Roll Call
3. Review of Cancellations and Additions
4. Approval of Minutes: *May 15, 2023*
5. Public Appearances
6. **PUBLIC HEARING: PLN 23-07**
   - Applicant: Chuck Peters
   - Landowner: Peters Family LLLP
   - Request: 744 Animal Unit Feedlot
   - Location: Northeast ¼ of the Southeast ¼, Section 32-110-27 in Oshawa Township
   - Parcel Number: 10.132.0800
7. Review Permits
8. Old Business
9. Other Business: By-Law revision approval
10. Communications
11. Adjourn

PLANNING COMMISSION
REGULAR MONTHLY MEETING MINUTES

AUGUST 21, 2023	7:43 PM	NICOLLET COUNTY BOARD ROOM

ROLL CALL	COMMISSIONERS PRESENT	COMMISSIONERS ABSENT EXCUSED	NICOLLET COUNTY STAFF PRESENT
	☒ Dave Ubel, *Chair* ☒ Jon Thoreson, *Vice Chair* ☒ Marie Dranttel, *Commissioner* ☒ Lloyd Hoffmann ☒ Justin Laven ☒ Randy Schwab	☐ Dave Ubel, *Chair* ☐ Jon Thoreson, *Vice Chair* ☐ Marie Dranttel, *Commissioner* ☐ Lloyd Hoffmann ☐ Justin Laven ☐ Randy Schwab	☒ Spencer Crawford, Deputy Zoning Administrator (DZA) ☒ Roxann Klein, Assistant County Attorney (ACA) ☒ Shana Jackson, County Assessor (Assessor) ☒ Crystal Madden, Recording Secretary ☐ Other Staff: ☐ Other Staff:

REVIEW OF CANCELLATIONS & ADDITIONS	DZA Crawford requested the Commission move Agenda Item #9: By-Law Revision approval, to the first order of business before the public hearing. A motion was made by Vice Chair Thoreson, and seconded by Commissioner Laven to adopt the updated Planning Commission By-Laws. The vote passed 6-0.

APPROVAL OF MAY 15, 2023 MINUTES	MOTION		2ND
APPROVE	☐ Dave Ubel, *Chair* ☐ Jon Thoreson, *Vice Chair* ☐ Marie Dranttel, *Commissioner* ☒ Lloyd Hoffmann ☐ Justin Laven ☐ Randy Schwab		☐ Dave Ubel, *Chair* ☐ Jon Thoreson, *Vice Chair* ☐ Marie Dranttel, *Commissioner* ☐ Lloyd Hoffmann ☐ Justin Laven ☒ Randy Schwab
VOTE TO APPROVE MINUTES	☒ PASS	☐ FAIL	VOTE: 6 - 0

PUBLIC APPEARANCES	None.

PUBLIC HEARINGS – Conditional Use

PLN23-07	APPLICANT/LANDOWNER: Chuck Peters/Peters Family LLLP
DESCRIPTION	Request for conditional use approval to construct and operate a 744 animal unit swine feedlot wean to finishing barn with an underfloor liquid manure storage area within the Agricultural Preservation Zoning District.
CONFLICT OF INTEREST	Commissioner Laven recused himself from this discussion due to a conflict of interest.
SITE VISIT & PUBLIC CONTACT	Commissioner Schwab visited the site. There was no contact with Commissioners from members of the public.
STAFF REPORT PRESENTED BY	DZA Crawford
APPLICANT TESTIMONY	Present to represent the application was Chuck Peters, 41129 State Highway 99, St. Peter
PUBLIC TESTIMONY	No one was present to provide public testimony. No other correspondence was received.
COMMISSION DISCUSSION	Further discussion between the Applicant, Commission, and Staff took place.

COMMISSION ACTION - CONDITIONS	MOTION	2ND
RECOMMEND APPROVAL WITH CONDITIONS, as recommended	☐ Dave Ubel, *Chair* ☐ Jon Thoreson, *Vice Chair* ☐ Marie Dranttel, *Commissioner* ☐ Lloyd Hoffmann ☐ Justin Laven ☒ Randy Schwab	☐ Dave Ubel, *Chair* ☐ Jon Thoreson, *Vice Chair* ☒ Marie Dranttel, *Commissioner* ☐ Lloyd Hoffmann ☐ Justin Laven ☐ Randy Schwab

DRAFT

VOTE TO RECOMMEND APPROVAL	☒ PASS	☐ FAIL	VOTE: 5 - 0

COMMISSION ACTION – FINDINGS OF FACT	**MOTION**		**2ND**
Vote to APPROVE THE FINDINGS OF FACT AS STATED	☐ Dave Ubel, *Chair* ☒ Jon Thoreson, *Vice Chair* ☐ Marie Dranttel, *Commissioner* ☐ Lloyd Hoffmann ☐ Justin Laven ☐ Randy Schwab		☐ Dave Ubel, *Chair* ☐ Jon Thoreson, *Vice Chair* ☐ Marie Dranttel, *Commissioner* ☐ Lloyd Hoffmann ☐ Justin Laven ☒ Randy Schwab
	☒ PASS	☐ FAIL	VOTE: 5 - 0

ADDITIONAL ITEMS			
OLD BUSINESS	None.		
OTHER BUSINESS	None.		
COMMUNICATIONS	None.		
MOTION TO ADJOURN MEETING	**MOTION**		**2ND**
08:18 PM	☐ Dave Ubel, *Chair* ☐ Jon Thoreson, *Vice Chair* ☐ Marie Dranttel, *Commissioner* ☐ Lloyd Hoffmann ☐ Justin Laven ☒ Randy Schwab		☐ Dave Ubel, *Chair* ☒ Jon Thoreson, *Vice Chair* ☐ Marie Dranttel, *Commissioner* ☐ Lloyd Hoffmann ☐ Justin Laven ☐ Randy Schwab
VOTE TO ADJOURN MEETING	☒ PASS	☐ FAIL	VOTE: 6 - 0

CRYSTAL MADDEN, RECORDING SECRETARY		**DATE**	**9/19/2023**
DAVE UBEL, CHAIR		**DATE**	**9/19/2023**

DRAFT

PLANNING & ZONING ADVISORY COMMISSION
CRITERIA FOR GRANTING A CONDITIONAL USE PERMIT

Name of Applicant	Chuck Peters	**Hearing**	August 21, 2023
Property Owner	Peters Family LLLP	**BOC Meeting**	September 12, 2023
File	PLN23-07		

Use Request Conditional use approval to construct and operate a swine feedlot wean to finishing barn with an underfloor liquid manure storage area.

FINDINGS OF FACT

Authority for issuance of conditional use permits is derived from Minnesota State Statute §394.301 and Nicollet County Zoning Ordinance, Section 505. The conditional use must maintain the health, safety, morals, and general welfare of the community.

1. Given the nature of the land, the requested use is compatible with the general welfare, public health and safety.

COMMISSION MEMBER	YES	NO	ABSTAIN	ABSENT	REASON
Dave Ubel	☒	☐	☐	☐	The requested use complies with typical feedlot development.
Jon Thoreson	☒	☐	☐	☐	
Marie Dranttel	☒	☐	☐	☐	
Lloyd Hoffmann	☒	☐	☐	☐	
Justin Laven	☐	☐	☒	☐	
Randy Schwab	☒	☐	☐	☐	

2. The requested use will not create an unreasonably excessive burden on the existing roads or utilities.

COMMISSION MEMBER	YES	NO	ABSTAIN	ABSENT	REASON
Dave Ubel	☒	☐	☐	☐	The requested use is of typical size and is located on blacktop highway with minimal burden on public infrastructure.
Jon Thoreson	☒	☐	☐	☐	
Marie Dranttel	☒	☐	☐	☐	
Lloyd Hoffmann	☒	☐	☐	☐	
Justin Laven	☐	☐	☒	☐	
Randy Schwab	☒	☐	☐	☐	

3. The requested use is compatible with the surrounding area and will not significantly depreciate nearby properties.

COMMISSION MEMBER	YES	NO	ABSTAIN	ABSENT	REASON
Dave Ubel	☒	☐	☐	☐	The requested use meets standards and is compatible with the surrounding area.
Jon Thoreson	☒	☐	☐	☐	
Marie Dranttel	☒	☐	☐	☐	
Lloyd Hoffmann	☒	☐	☐	☐	
Justin Laven	☐	☐	☒	☐	
Randy Schwab	☒	☐	☐	☐	

4. The structure and the use shall have an appearance that will not have an unreasonably adverse effect on nearby properties.

COMMISSION MEMBER	YES	NO	ABSTAIN	ABSENT	REASON
Dave Ubel	☒	☐	☐	☐	The requested use is similar to other nearby properties. The primary land use is Agriculture and typical of other properties in the area.
Jon Thoreson	☒	☐	☐	☐	
Marie Dranttel	☒	☐	☐	☐	
Lloyd Hoffmann	☒	☐	☐	☐	
Justin Laven	☐	☐	☒	☐	
Randy Schwab	☒	☐	☐	☐	

5. The requested use is consistent with the Nicollet County Land Use Ordinances.

COMMISSION MEMBER	YES	NO	ABSTAIN	ABSENT	REASON
Dave Ubel	☒	☐	☐	☐	The requested use meets Nicollet County Zoning Ordinances.
Jon Thoreson	☒	☐	☐	☐	
Marie Dranttel	☒	☐	☐	☐	
Lloyd Hoffmann	☒	☐	☐	☐	
Justin Laven	☐	☐	☒	☐	
Randy Schwab	☒	☐	☐	☐	

6. The requested use is not in conflict with the Nicollet County Comprehensive Plan.

COMMISSION MEMBER	YES	NO	ABSTAIN	ABSENT	REASON
Dave Ubel	☒	☐	☐	☐	The requested use is located within the Agricultural Zoning District where feedlots are a permitted use.
Jon Thoreson	☒	☐	☐	☐	
Marie Dranttel	☒	☐	☐	☐	
Lloyd Hoffmann	☒	☐	☐	☐	
Justin Laven	☐	☐	☒	☐	
Randy Schwab	☒	☐	☐	☐	

7. The requested use will not create an unreasonably adverse effect because of noise, odor, glare, or general unsightliness, for nearby property owners.

COMMISSION MEMBER	YES	NO	ABSTAIN	ABSENT	REASON
Dave Ubel	☒	☐	☐	☐	The requested use seems to meet all state and county standards.
Jon Thoreson	☒	☐	☐	☐	
Marie Dranttel	☒	☐	☐	☐	
Lloyd Hoffmann	☒	☐	☐	☐	
Justin Laven	☐	☐	☒	☐	
Randy Schwab	☒	☐	☐	☐	

8. The requested use is reasonably related to the existing land use and environment.

COMMISSION MEMBER	YES	NO	ABSTAIN	ABSENT	REASON
Dave Ubel	☒	☐	☐	☐	The surrounding area is zoned for agricultural use.
Jon Thoreson	☒	☐	☐	☐	
Marie Dranttel	☒	☐	☐	☐	
Lloyd Hoffmann	☒	☐	☐	☐	
Justin Laven	☐	☐	☒	☐	
Randy Schwab	☒	☐	☐	☐	

9. There are no apparent unreasonable health risks posed to neighbors or the public in general.

COMMISSION MEMBER	YES	NO	ABSTAIN	ABSENT	REASON
Dave Ubel	☒	☐	☐	☐	The requested use meets state and local standards. There is no apparent unreasonable health risks.
Jon Thoreson	☒	☐	☐	☐	
Marie Dranttel	☒	☐	☐	☐	
Lloyd Hoffmann	☒	☐	☐	☐	
Justin Laven	☐	☐	☒	☐	
Randy Schwab	☒	☐	☐	☐	

10. The requested use ☐ WILL ☒ WILL NOT have adverse effect upon public health, safety and welfare due to the following other factors:

COMMISSION MEMBER	YES	NO	ABSTAIN	ABSENT	REASON
Dave Ubel	☒	☐	☐	☐	The requested use is typical feedlot development and meets OFFSET requirements. Conditions of the permit require a Manure Management Plan.
Jon Thoreson	☒	☐	☐	☐	
Marie Dranttel	☒	☐	☐	☐	
Lloyd Hoffmann	☒	☐	☐	☐	
Justin Laven	☐	☐	☒	☐	
Randy Schwab	☒	☐	☐	☐	

THE NICOLLET COUNTY PLANNING AND ZONING ADVISORY COMMISSION

☒ RECOMMENDS APPROVAL OF THE REQUESTED USE ☐ RECOMMENDS DENIAL OF THE REQUESTED USE

THIS DECISION WAS BASED UPON

☒ Application ☒ Site visit

☒ Information received at public hearing ☒ Staff Report

☒ Pictures

SPECIAL CONDITIONS ARE LISTED ON THE RECORDED CONDITIONAL USE PERMIT AND IN THE RECORD.

FACTS SUPPORTING THE ANSWER TO EACH QUESTION ABOVE ARE HEREBY CERTIFIED AS THE FINDINGS OF THE NICOLLET COUNTY PLANNING AND ZONING ADVISORY COMMISSION.

Date: 8/21/23 Chair: Dave Ubel

STATE OF MINNESOTA
COUNTY OF NICOLLET

The foregoing instrument was acknowledged before me this 21 day of August 2023,

by Dave Uhel.

Notarial stamp or seal (or other title or rank)

SPENCER G. CRAWFORD
Notary Public-Minnesota
My Commission Expires Jan 31, 2027

Spencer Crawford

SIGNATURE OF PERSON TAKING ACKNOWLEDGMENT

CONDITIONAL USE PERMIT

FEEDLOT

Chuck Peters

PLN23-07

NICOLLET COUNTY
PLANNING & ZONING ADVISORY COMMISSION

SUBJECT:	Conditional Use Permit PLN23-07
APPLICANT:	Chuck Peters
LANDOWNER:	Peters Family LLLP
LOCATION:	Northeast ¼ of the Southeast ¼, Section 32-110-27 in Oshawa Township
PARCEL NO:	10.132.0800
EXISTING ZONING:	Agricultural Preservation
HEARING DATE:	08/21/2023
COUNTY BOARD DATE:	09/12/2023
60 DAYS FROM REQUEST:	10/01/2023

REQUEST & PROJECT DESCRIPTION

Chuck Peters is requesting conditional use approval to construct and operate a swine feedlot wean to finishing barn with an underfloor liquid manure storage area. The proposal consists of the following:

Proposed Animal & Animal Units		
Animal Type	**Number**	**Units**
Swine Between 55 & 300 pounds	2,480	744

Proposed Construction		
Type	**Size**	**Square footage/ Volume**
Total confinement finishing barn	122’ x 177’	21,594 square feet
Liquid manure storage area	122’ x 177’ x 8’	1,059,100 gallons

Access:

The Applicant intends to construct a driveway along the eastern property line and connect to State Highway 99. The MNDOT access permit is currently under review and the final driveway plans may change to meet state standards. The Applicant is amendable to using the existing field approach to the west of their proposal if required by MNDOT.

Dead Animal Disposal:

The Applicant intends to compost deceased animals.

Manure Management Plan:

A Manure Management Plan has been submitted in accordance with Minnesota Administrative Rules Section 7020.2225. The manure from the storage area will be removed yearly. The plan has both owned acres for manure application and also acres available to transfer manure ownership.

COUNTY STANDARDS

The proposal seems to meet the requirements for a feedlot within the Agricultural Preservation District. The required setbacks and actual distances are as follows:

Setbacks		
Type	**Required**	**Proposed**
Right-of-way	85’	692’
Side (west)	20’	1173’
Side (east)	20’	20’
Rear	20’	1169’
Ditch	100’	2,263’
OFFSET 93% (dwellings & public areas)	1,016’	2,359’
OFFSET 99% (Municipalities)	5,671’	23,745’

Proposed setbacks were estimated by staff to the nearest qualifying structure or area.

MINNESOTA POLLUTION CONTROL AGENCY STANDARDS

The Applicant has submitted a Construction Short Form Application from the Minnesota Pollution Control Agency (MPCA) to operate a feedlot for the proposed design and capacity. The permit will be issued by Nicollet County on behalf of the MPCA if the Conditional Use is approved.

SURROUNDING LAND USE

The surrounding land use is predominantly agricultural. The Applicant operates an existing feedlot on the south side of Highway 99.

NEIGHBOR NOTIFICATION

Property owners were notified of the proposal per the standards of Minnesota State Statute 394.26.

CRITERIA FOR GRANTING A CONDITIONAL USE PERMIT

1. **Given the nature of the land, the requested use is compatible with the public health, safety, and general welfare.**

   - The proposal appears to meet Zoning Ordinance standards for feedlots in the Agricultural Preservation Zoning District.

   - The Applicant will be required to obtain a Construction Short Form Permit and comply with State Feedlot regulations.

   - The proposal is typical of feedlot developments within the county.

2. **The requested use will not create an unreasonably excessive burden on the existing roads or utilities.**

   - The size and function of the facility is not unreasonable for the proposed location.

   - It appears the burden on public infrastructure from the facility will be minimal.

3. **The requested use is compatible with the surrounding area and will not significantly depreciate nearby properties.**

   - The proposal appears to meet all Zoning Ordinance standards, including OFFSET and setbacks.

   - The predominant land use in the area is agricultural.

4. **The structure and the use shall have an appearance that will not have an unreasonably adverse effect on nearby properties.**

   - The facility design is typical of feedlot development within the county.

   - The predominant land use in the area is agricultural.

5. **The requested use is consistent with the Nicollet County Land Use Ordinances.**

   - The proposal appears to meet the standards of the Zoning Ordinance for feedlots in the Agricultural Preservation Zoning District.

6. **The requested use is not in conflict with the Nicollet County Comprehensive Plan.**

   - The Comprehensive Plan states that feedlots are a permitted and regulated use within the Agricultural Preservation Zoning District.

7. **The requested use will not create an unreasonably adverse effect because of noise, odor, glare, or general unsightliness, for nearby property owners.**

   - The proposal will be required to meet the applicable county and state standards for manure handling and management.

   - The site meets the required OFFSET setback to dwellings, public areas, and municipalities.

   - The facility will be of a design that is typical for a swine feedlot.

8. **The requested use is reasonably related to the existing land use and environment.**

   - The existing use and primary surrounding use is agricultural.

9. **There are no apparent unreasonable health risks posed to neighbors or the public in general.**

   - The proposal appears to meet the standards of the Zoning Ordinance for feedlots within the Agricultural Preservation Zoning District.

   - The Applicant will obtain a MPCA Construction Short Form Permit.

   - The proposal will meet the applicable county and state standards for manure handling and management.

10. **The requested use will/will not have an adverse effect upon public health, safety, and welfare due to the following other factors:**

    - The proposal is typical of feedlot developments within the County and applies with applicable regulations, including OFFSET.

STAFF RECOMMENDATIONS

1. The Applicant undertakes the project according to the plans and specifications submitted to the County with the application.

2. The Conditional Use Permit will be periodically reviewed by the County to assure compliance with the permit and permit conditions.

3. The County may enter onto the premises at reasonable times and in a reasonable manner to ensure the permit holder is in compliance with the permit conditions and all other applicable statutes, rules, and ordinances.

4. The Applicant must notify Property Services at least three days prior to the start of construction, including any related earthwork.

5. The feedlot must continually meet the 93% OFFSET Annoyance-Free Odor Rating for the duration of the operation.

6. The access drive shall be a minimum of 14 feet wide and shall be constructed with a base material depth sufficient to support access by emergency vehicles.

7. Manure that is in liquid or slurry form must be injected or incorporated within 24 hours.

8. Manure when transported should comply with Minnesota Administrative Rule 7020.2010.

9. The Applicant must provide, maintain, and follow an approved Manure Management Plan under the guidelines set forth in MPCA Rules, Chapter 7020.2225.

10. If required, the Applicant must obtain a Department of Natural Resources Division of Waters' Water Appropriations Permit.

11. If required, a Construction Stormwater Permit must be obtained from the Minnesota Pollution Control Agency (MPCA) prior to the start of construction.

12. The Applicant must obtain all required permits from the Minnesota Department of Transportation before the Zoning Permit is issued.

13. Dead animals must be disposed of in accordance with the Board of Animal health regulations.

Applicant: Chuck Peters
Landowner: Peters Family LLLP

PLN23-07

ATTACHMENT A	**Application**
ATTACHMENT B	**Documents Submitted by Applicant**
ATTACHMENT C	**Aerial Map**
ATTACHMENT D	**Location Map**
ATTACHMENT E	**OFFSET Map**
ATTACHMENT F	**Site Photographs**
ATTACHMENT G	**Neighbor Notification List**
ATTACHMENT H	**Criteria for Conditional Use Permit**

NICOLLET COUNTY EST. 1853

PROPERTY SERVICES DIVISION
501 S MINNESOTA AVENUE, SAINT PETER, MN 56082
507-934-7070

ZONING PERMIT

TOTAL FEES: **$496.00**

Map#: 13-32-400-001
Parcel#: 10.132.0800
Permit#: PLN23-7
Date: 7/21/2023

Applicant: Chuck Peters
Telephone: 507 381 5256
Owner: Peters Family LLLP
Property Address: N/A
Abbreviated Legal Description: SESE PT & NESE 32-110-27
Township: Oshawa Township
Zoning District(s): AGRICULTURAL

Record Type: Conditional Use Permit
Subtype: New
Category: AG Animal Storage Building
Description: New 744 AU Feedlot. 122' x 177', underfloor pit.
G.C. Licence#: TBD
Job Cost: 1125000

Planning Commission Hearing Date: **08/21/23**

Board of Commissioners Hearing Date: **09/12/23**

Charles Peters Charles Peters (Aug 2, 2023 07:42 CDT)	Aug 2, 2023	James Gaulke	07/31/23
APPLICANT SIGNATURE	**DATE**	**PROPERTY SERVICES**	**DATE**

ATTACHMENT A
Application

PLN23-07 Application

Final Audit Report 2023-08-02

Created:	2023-08-01
By:	Spencer Crawford (Spencer.Crawford@co.nicollet.mn.us)
Status:	Signed
Transaction ID:	CBJCHBCAABAAZI7m-mwl9ALhQPaCvfxdLJluA-Vj7wN7

"PLN23-07 Application" History

Document created by Spencer Crawford (Spencer.Crawford@co.nicollet.mn.us)
2023-08-01 - 1:42:35 PM GMT

Document emailed to petersfamilyfarm1@gmail.com for signature
2023-08-01 - 1:45:19 PM GMT

Email viewed by petersfamilyfarm1@gmail.com
2023-08-02 - 12:40:15 PM GMT

Signer petersfamilyfarm1@gmail.com entered name at signing as Charles Peters
2023-08-02 - 12:42:03 PM GMT

Document e-signed by Charles Peters (petersfamilyfarm1@gmail.com)
Signature Date: 2023-08-02 - 12:42:05 PM GMT - Time Source: server

Agreement completed.
2023-08-02 - 12:42:05 PM GMT

NICOLLET COUNTY EST. 1853

CONDITIONAL USE PERMIT APPLICANT QUESTIONNAIRE PROJECT DESCRIPTION

APPLICANT NAME: Chuck Peters DATE: 4/24/23

REQUEST: Contruction of a wean to finish swine barn

Please describe the specific details related to your request. If your request is approved, you will be held to the plans and specifications submitted to the County with your application.

Construction of a new swine wean to finish building. 2,480 head capacity or 744 animal units. 120 foot wide by 177 foot long building. 4 - 18 ton feed bins to be placed on concrete pad near the building. 600 foot driveway off of State hwy 99 to building.

ATTACHMENT B
Documents Submitted by Applicant

NICOLLET COUNTY EST. 1853

CONDITIONAL USE PERMIT APPLICANT QUESTIONNAIRE

APPLICANT NAME: Chuck Peters DATE: 4/24/23

REQUEST: Contruction of a wean to finish swine barn

In granting a conditional use permit, the County Board shall consider the advice and recommendation of the Planning Commission and the effect of the proposed use upon the health, safety, morals, and general welfare of the community. Among other things, the County Board shall make the following findings where applicable.

WHY DO YOU FEEL THE REQUESTS MEETS THE FOLLOWING CRITERIA?

1. Given the nature of the land, the requested use is compatible with public health, safety, and general welfare.

   The proposed barn will be built on flat agricultural land. No wetlands or streams are nearby.

2. The requested use will not create an unreasonably excessive burden on the existing roads or other utilities.

   No. The proposed barn will be located off of a black top state highway. 3 phase power runs along this property as well.

3. The requested us is compatible with the surrounding area and will not significantly depreciate nearby properties.

   The proposed barn will be built in a agricultural community. Swine buildings are common in this township.

4. The structure and use shall have an appearance that will not have an unreasonably adverse effect on nearby properties.

   The barn will be well maintained kept up.

5. The requested use is consistent with the County Zoning Ordinance.

   Yes.

6. The requested use is not in conflict with the Comprehensive Plan.

   No.

7. The requested use will not create an unreasonably adverse effect because of noise, odor, glare, or general unsightliness, for nearby property owners.

   No. We are setting the barn 600 feet off of the highway to reduce any negative externalities to highway traffic. We are the closest home owners to the barn.

8. The requested use is reasonably related to the existing land use and environment.

   Yes.

9. There are no apparent unreasonable health risks posed to neighbors or the public in general.

   No.

10. The requested use will/will not have an adverse effect upon public health, safety, and welfare due to the following other factors.

    No.

A MAJORITY OF THE CUP CRITERIA MUST BE MET IN ORDER FOR THE REQUEST TO BE APPROVED.

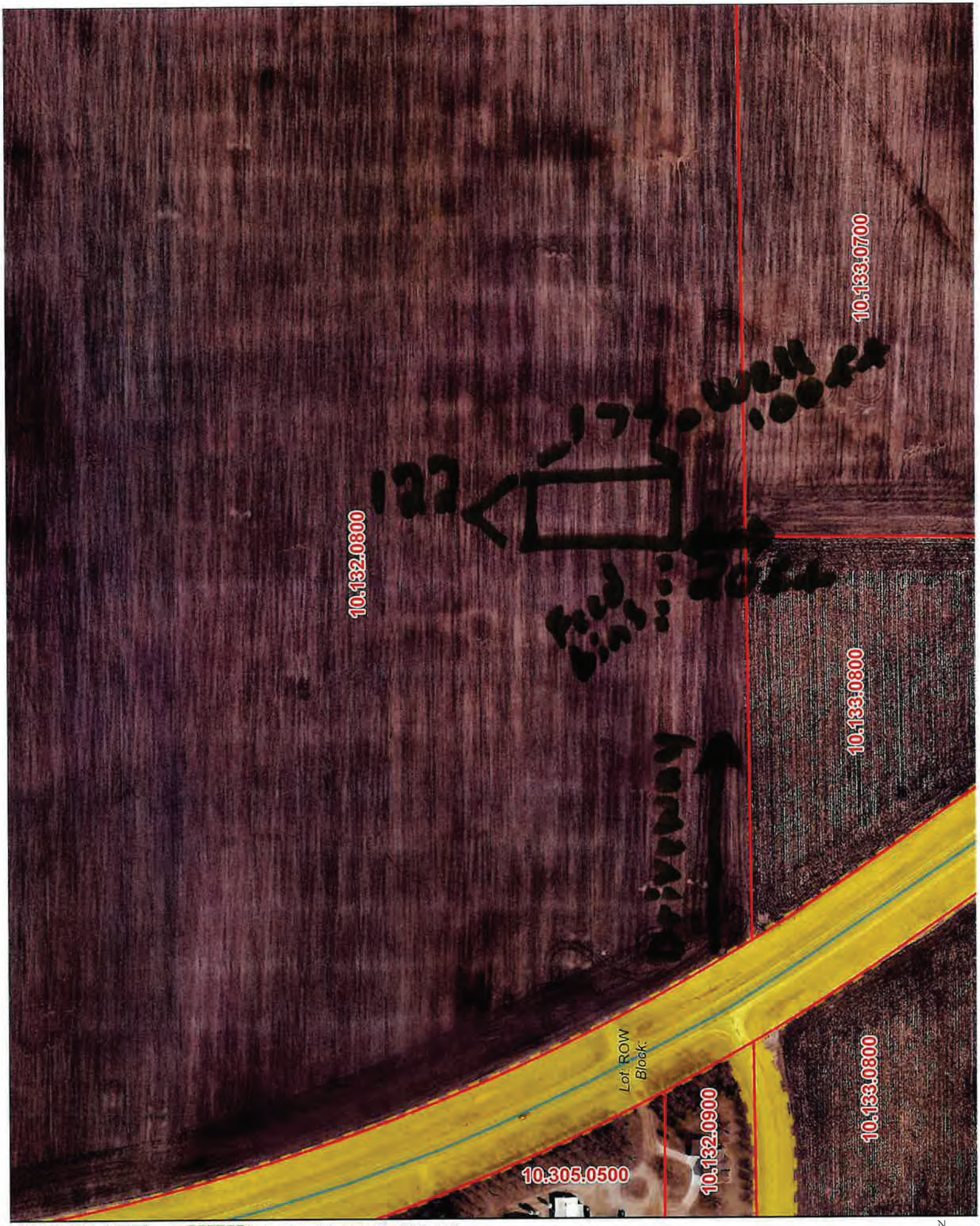

NICOLLET COUNTY EST. 1853

Disclaimer: The information herein is intended to be a true representation of available records. However, there is no guarantee to the user as to the accuracy, suitability, or reliability of this data for any purpose. Nicollet County assumes no responsibility for actual or consequential damage incurred as a result of any user's reliance on this data. The user accepts the data "as-is" and assumes all risks associated with its use. By acceptance of this data, the user agrees not to transmit this data or provide access to it or any part of it to another party.

0 100 200 400 Feet

N

AG PROPERTY SOLUTIONS
3826 460th Ave. P.O. Box 96
EMMETSBURG, IOWA
50536

PHONE: (712) 852-8556
W.AGPROPERTYSOLUTIONS.COM

Nick Peters	
HEAD PER SITE	ADDRESS
2,400hd	41129 St. HWY 99, St. Peter, MN 56003

FAR - FARROWING BUILDING
OFF - MAIN OFFICE
LOA - HALLWAYS/LOAD-OUTS
COM - COMPOST BUILDING
OUT - OUTBUILDINGS
FIN - FINISHER BUILDING
NUR - NURSERY BUILDING

UP - UNDERGROUND PLUMBING
SL - SLAT LAYOUT
EQ - EQUIPMENT LAYOUT
WS - WATER LAYOUT
FS - FEED LAYOUT
HT - HEAT LAYOUT
VT - VENTILATION LAYOUT
GT - GATING LAYOUT
OF - OFFICE
HL - HALLWA
EL - ELECTRICAL
DL - DOOR LAYOUT

2 - ELEVATIONS (vertical views)
3 - SECTIONS (zoom in views)
4 - DETAILS (call-outs, diagrams, fine detail items)
5 - GENERAL (symbols, legends, notes, etc.)

CO
CO
CO
C0
CO
CO
CO
SL
EQ
WS
WS
WS
WS
FS
HT
VT
GT
GT
OF
EL
DL

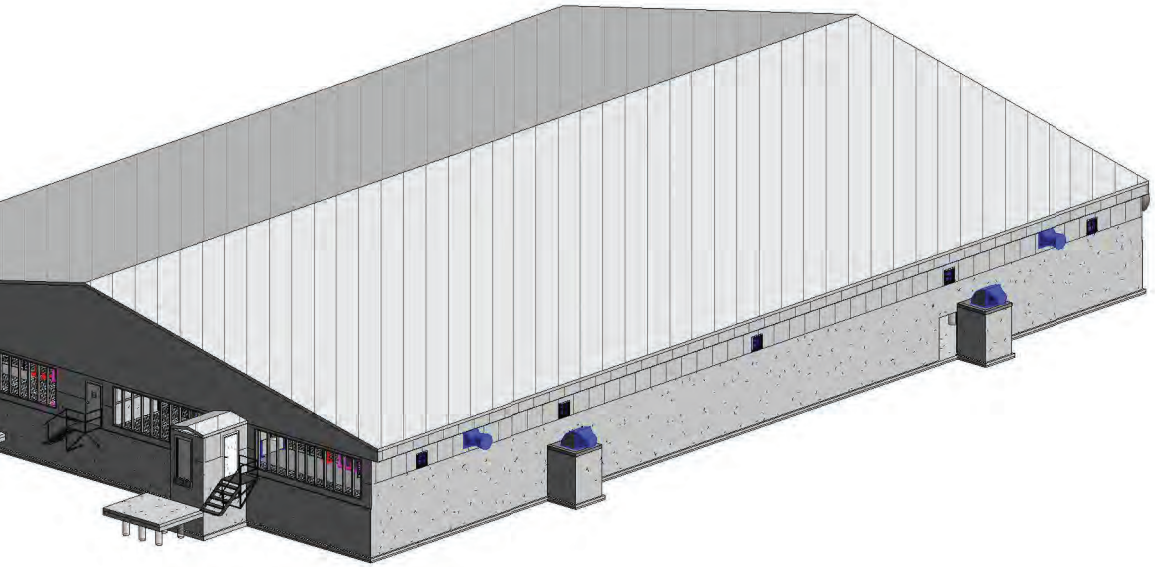

SUBCONTRACTORS			
Concrete Contractor	Concrete Material	Rebar Supplier	Pre-Cast Supplier
N/A	N/A	N/A	N/A
Engineer	Excavation	Sub-Grade Plumbing	
N/A	N/A	N/A	
Framing Contractor	Equipment Installer	Electrical Installer	LP Installer
N/A	N/A	N/A	N/A
Framing Materials	Gating Supplier	Ventilation Material	Feed System Materials
N/A	N/A	N/A	N/A

MATERIAL COLORS			
Roof	Endwall	Endwall Wainscot	Gables
N/sdsd	N/A	N/A	N/A
Corner	Ridge Cap	Ridgolator	Sidewall
N/A	N/A	N/A	N/A
Door/Window Trim	Eave/Fasica	Gable/Rake	
N/A	N/A	N/A	

Bar
N/A
Bar
N/A
Bar
N/A

AG PROPERTY

Revision:

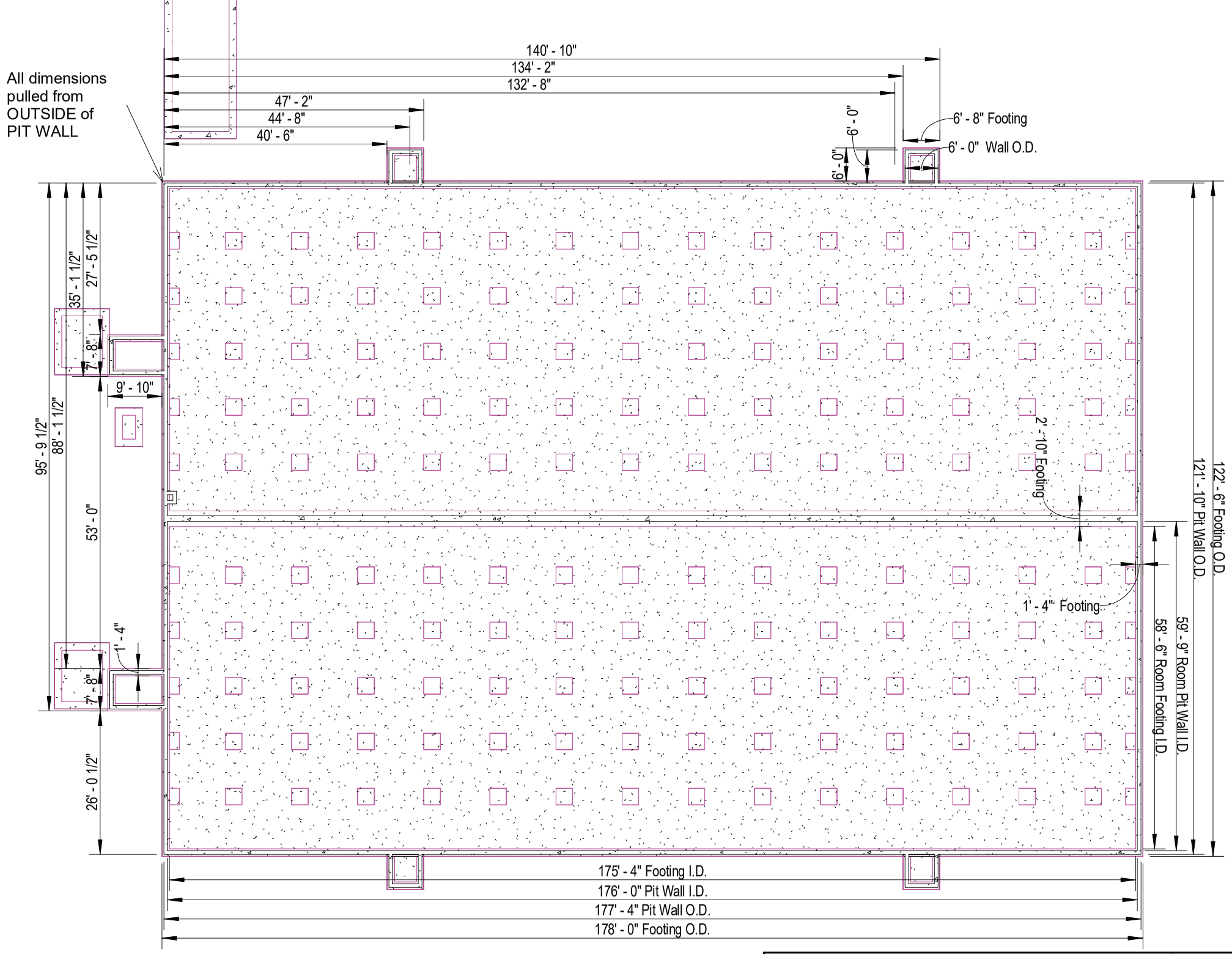

AG PROPERTY

Revision:

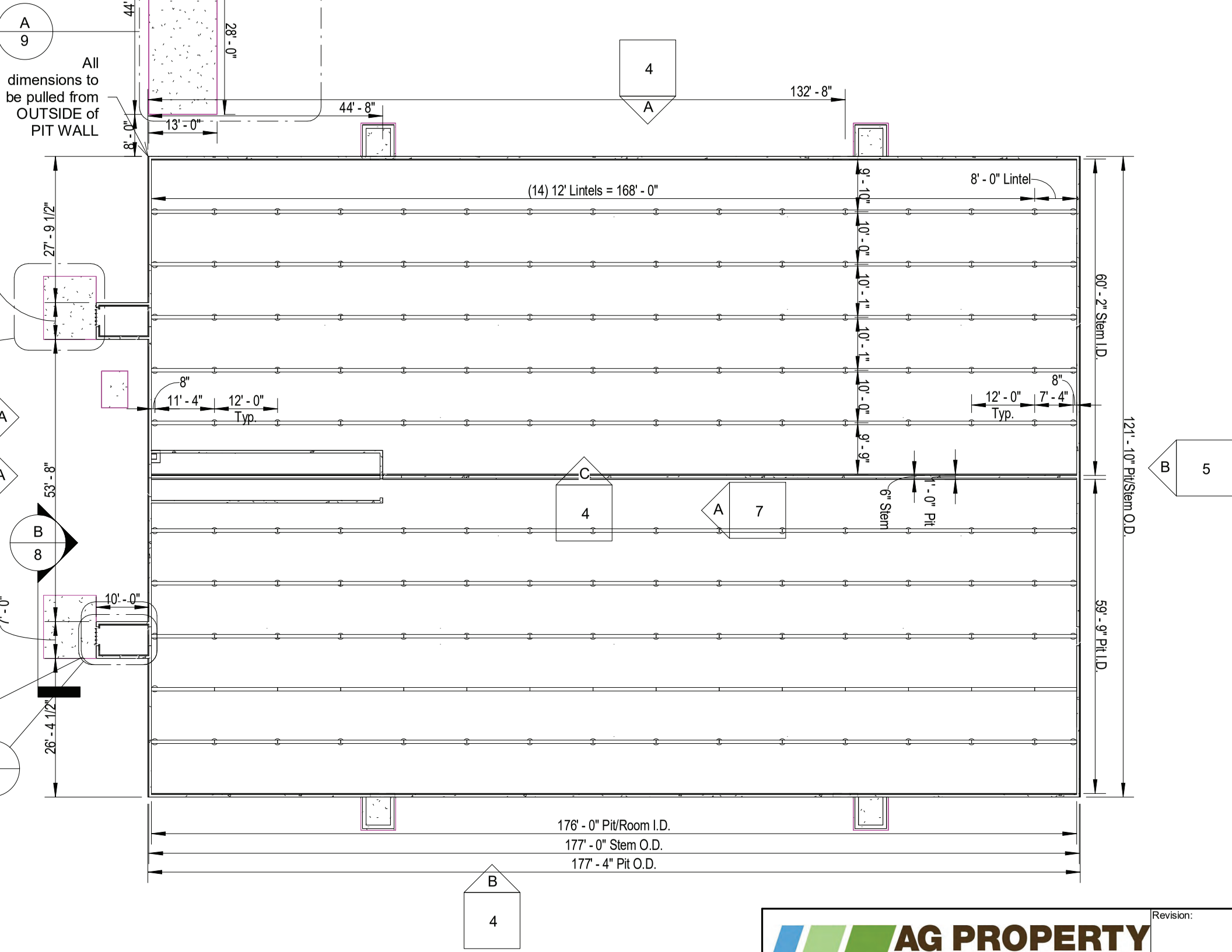

AG PROPERTY

Revision:

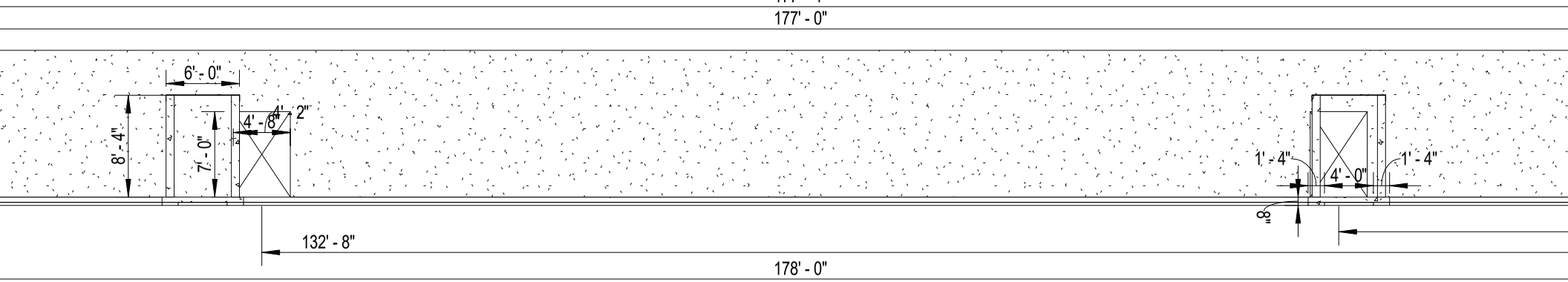

it Wall

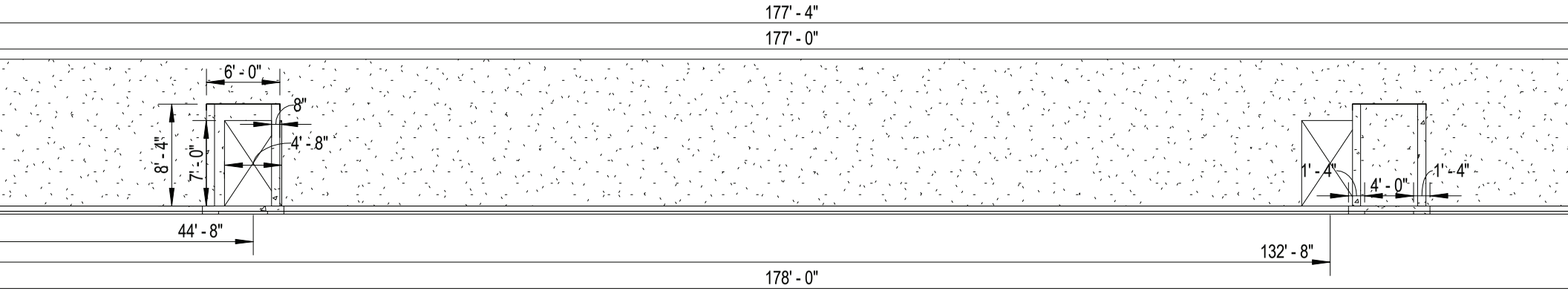

Pit Wall

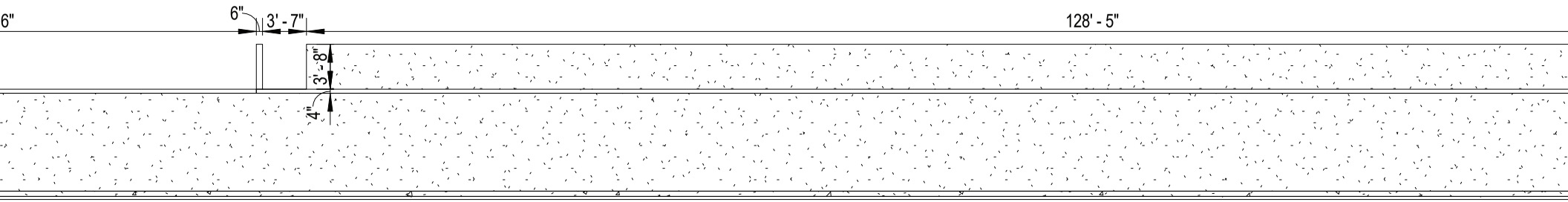

n Wall

AG PROPERTY

Revision:

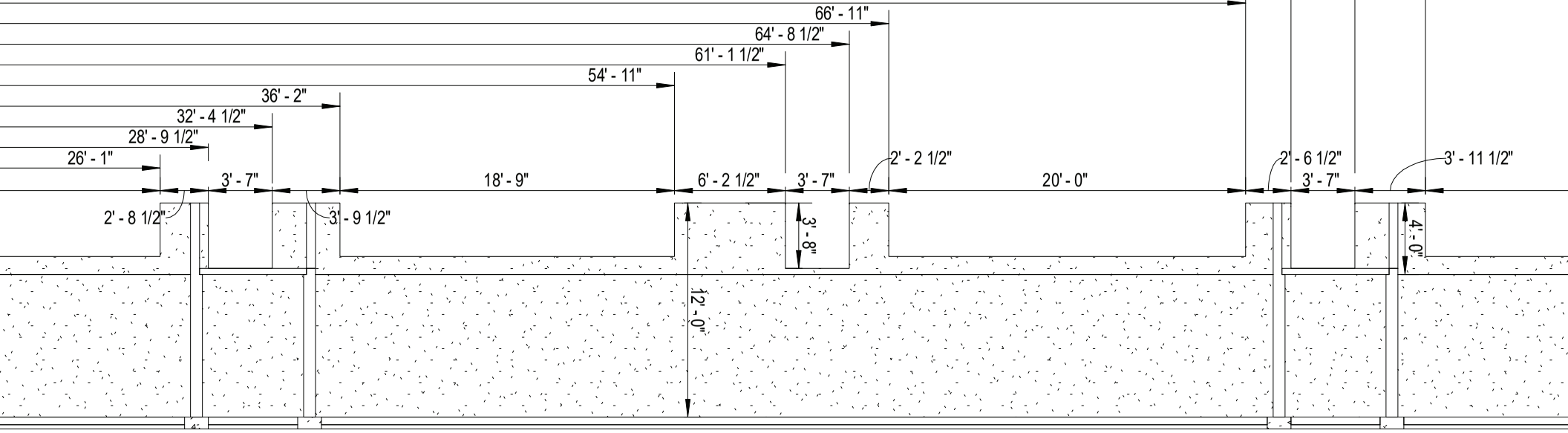

ll

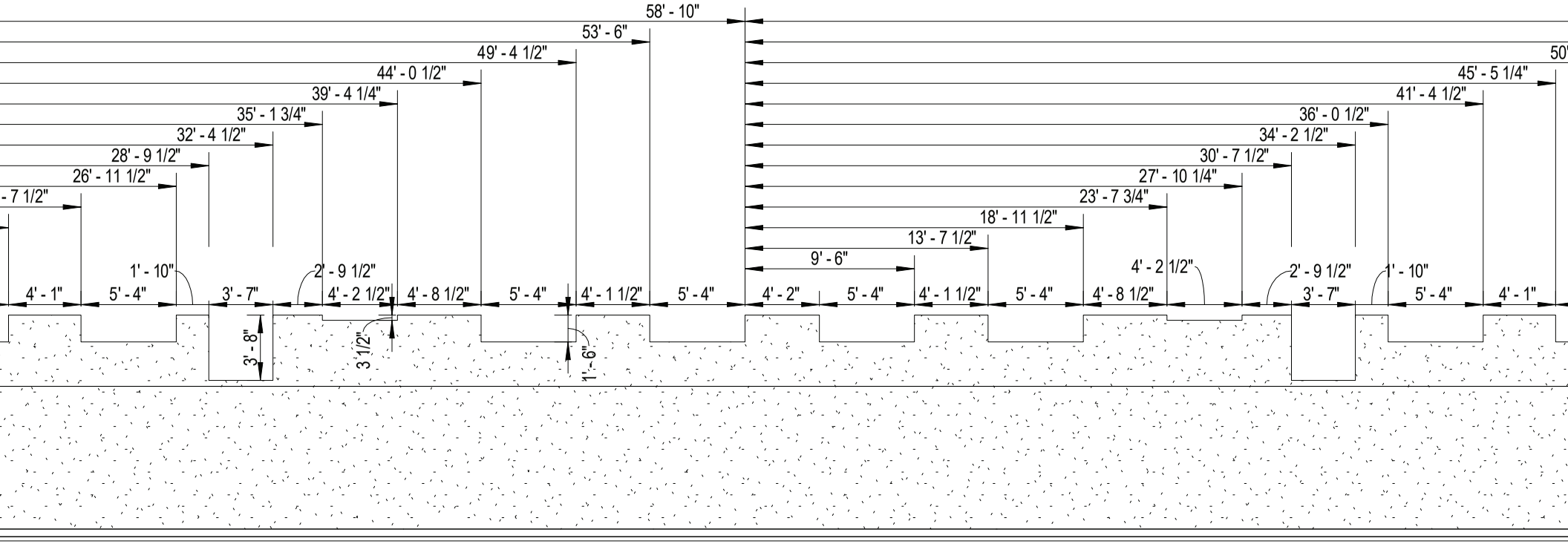

dwall

AG PROPERTY

Revision:

Revisions
prints

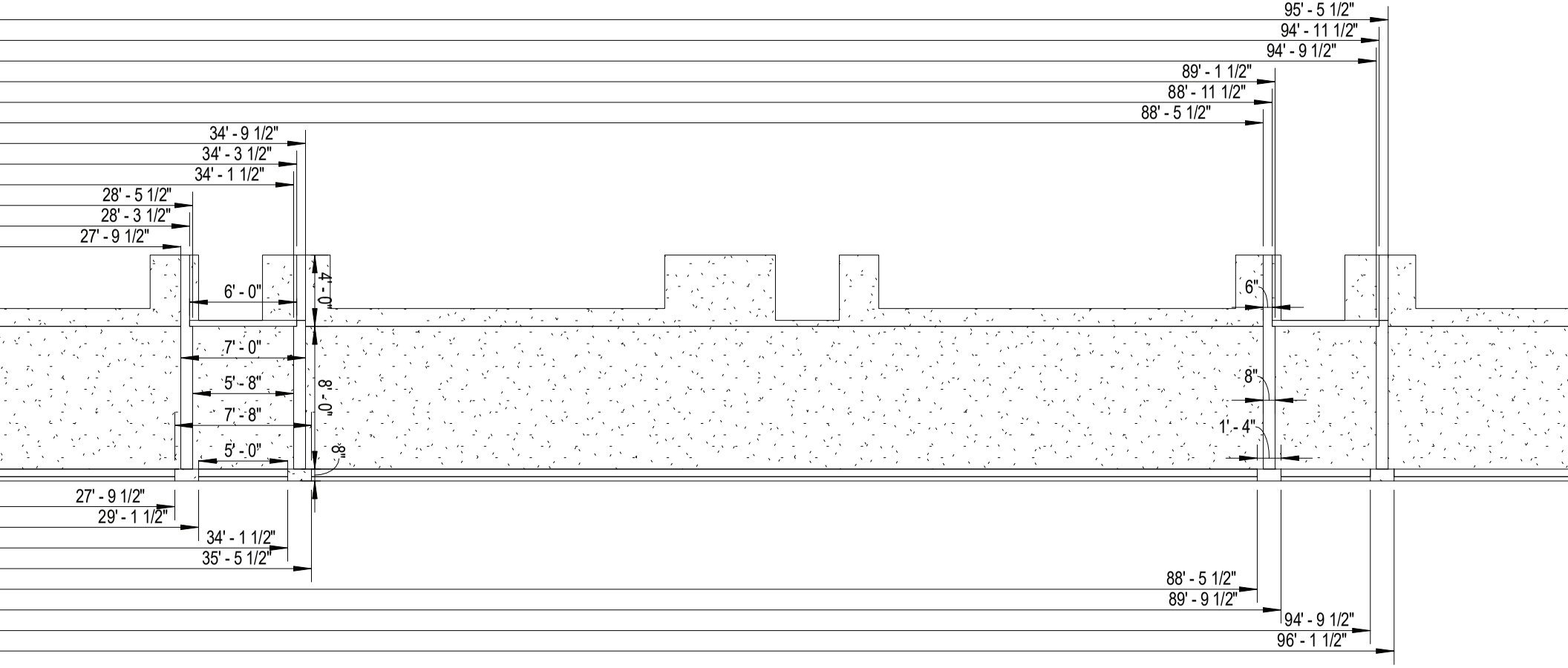

AG PROPERTY

Revision:

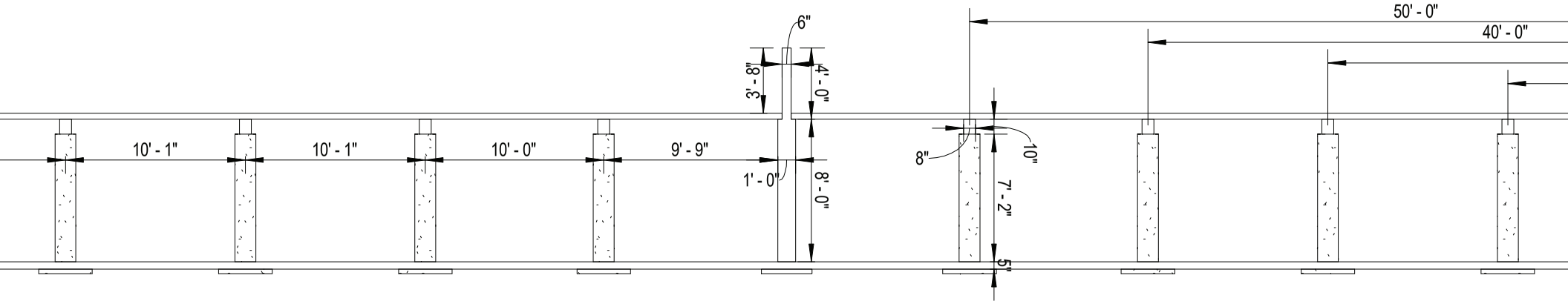

ction

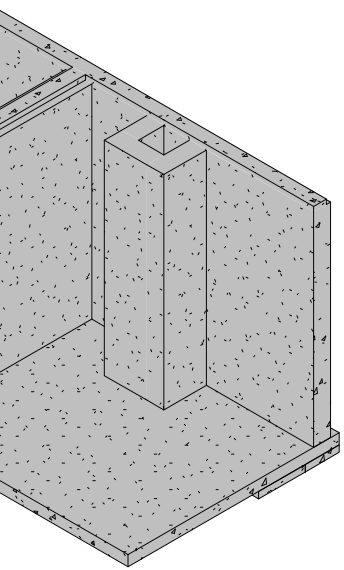

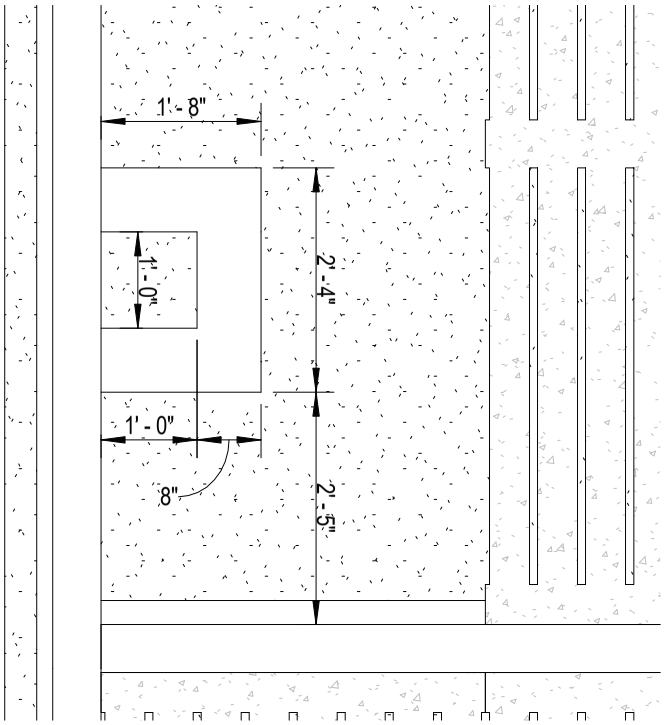

ncoming Water Line

C Incoming line

AG PROPERTY

Revision:

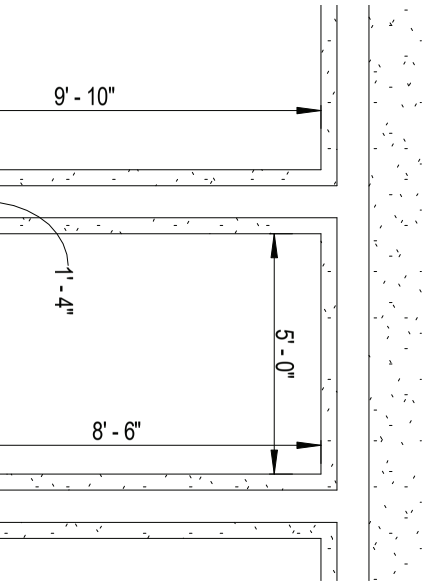

oting

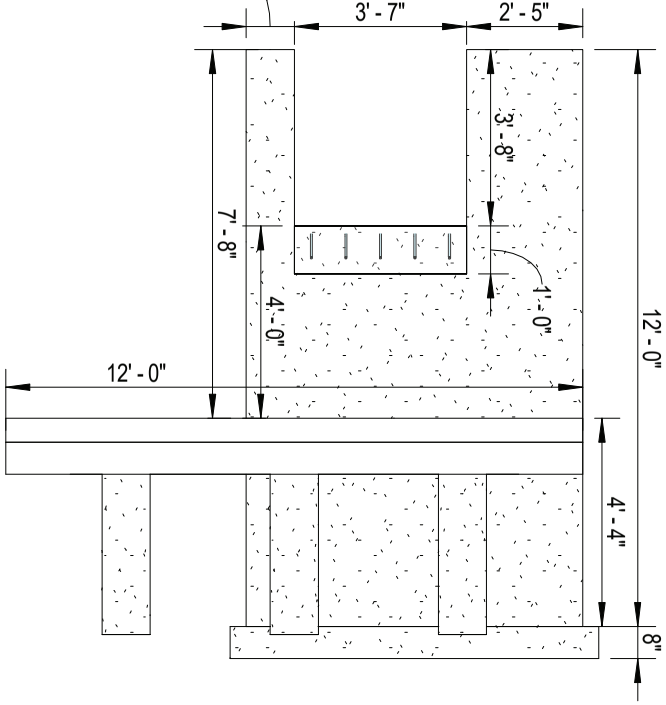

B Load-Out Front View
1/4" = 1'-0"

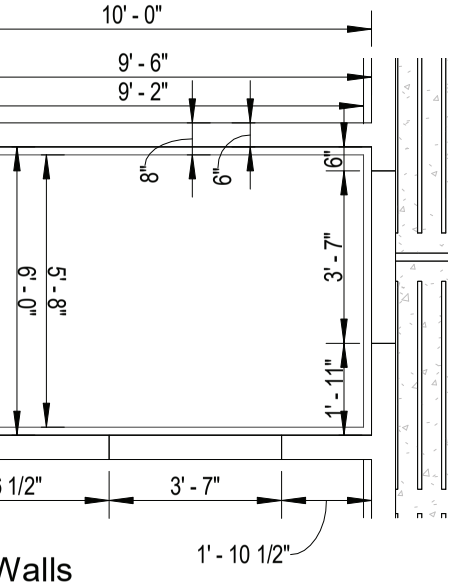

Walls
"

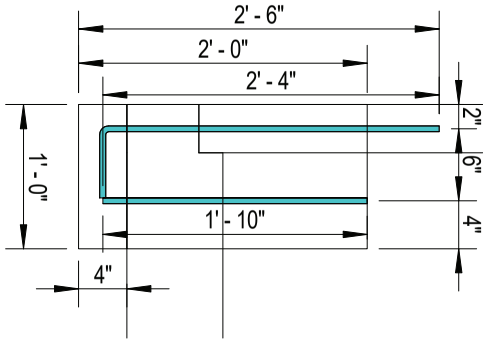

D Bulk Head Detail
3/4" = 1'-0"

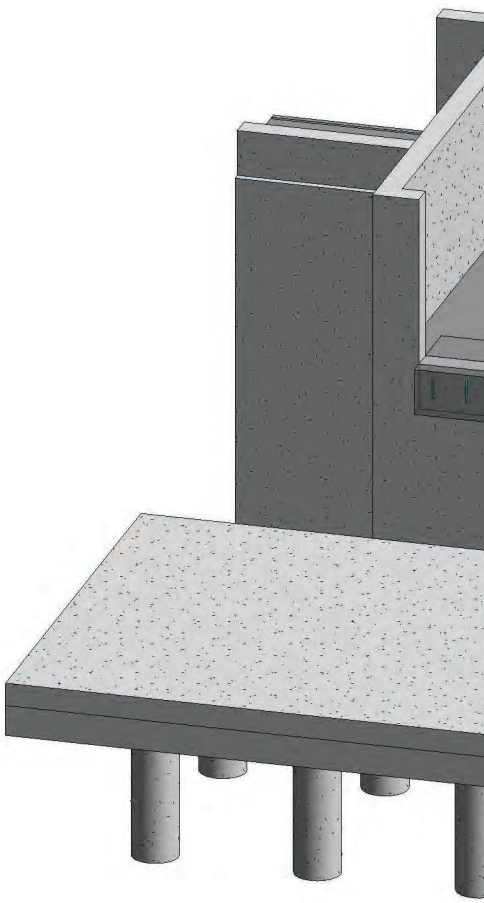

E Load-Out - Iso View

AG PROPERTY

Revision:

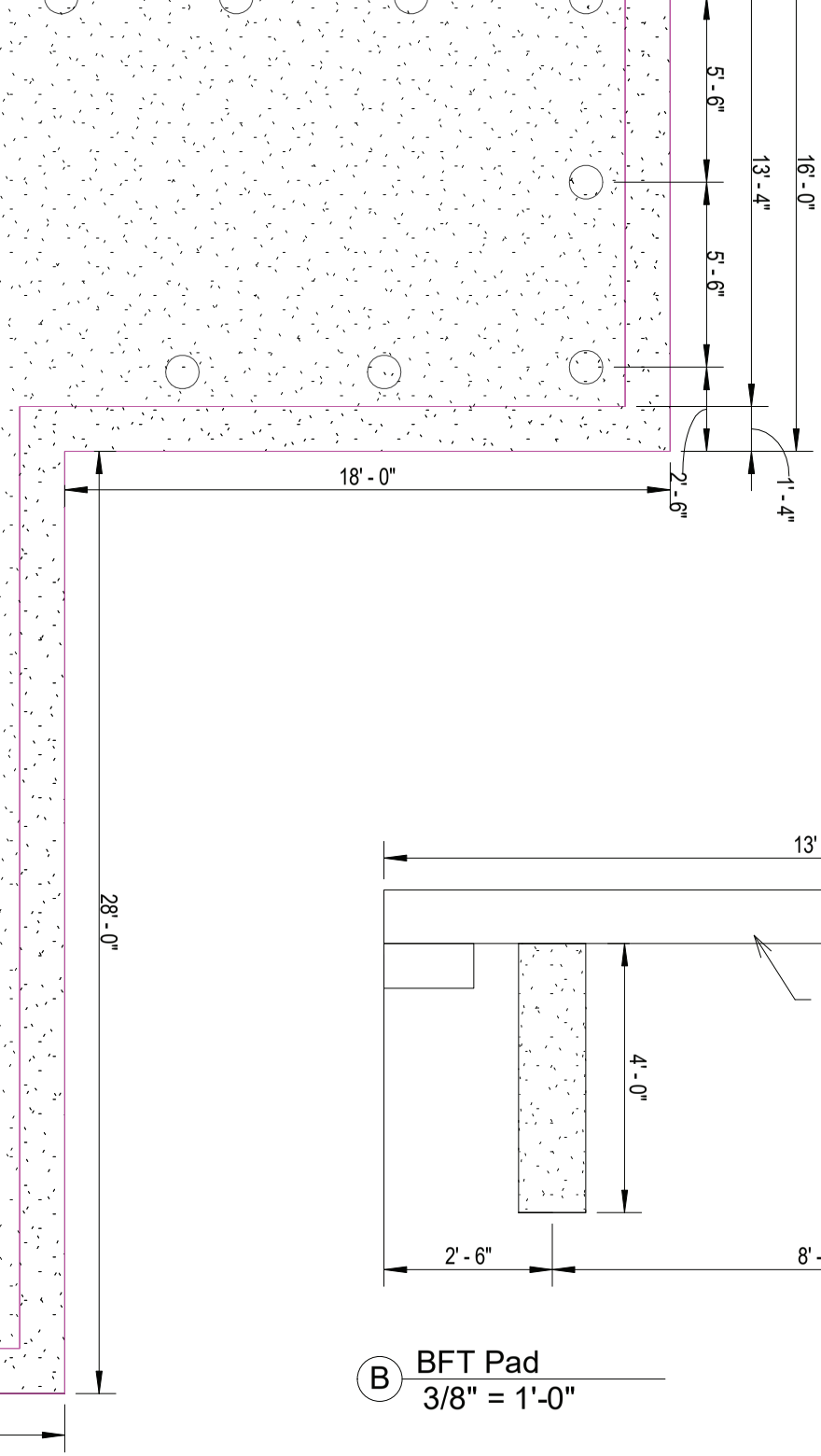

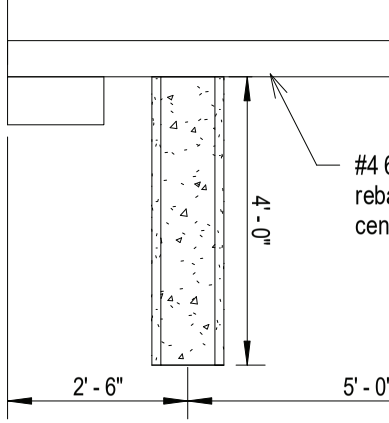

C Trucker Pad
3/8" = 1'-0"

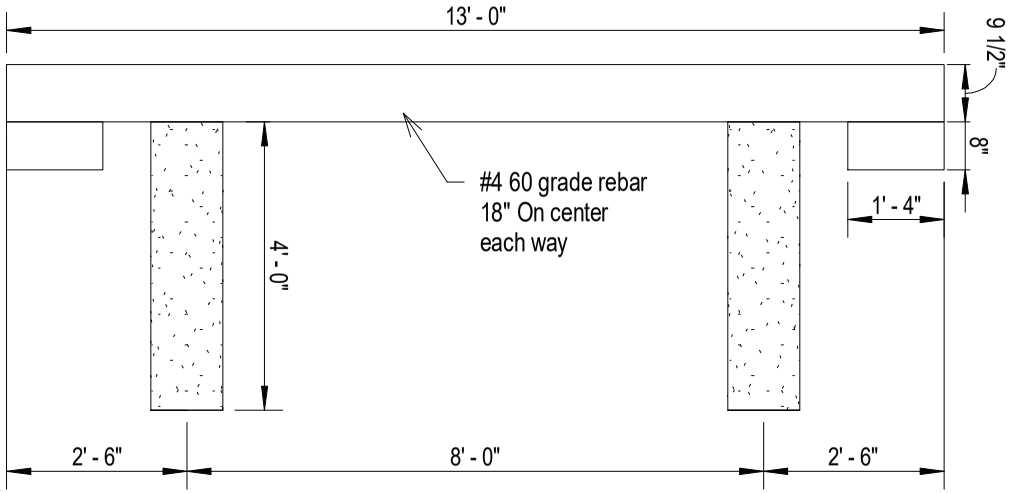

B BFT Pad
3/8" = 1'-0"

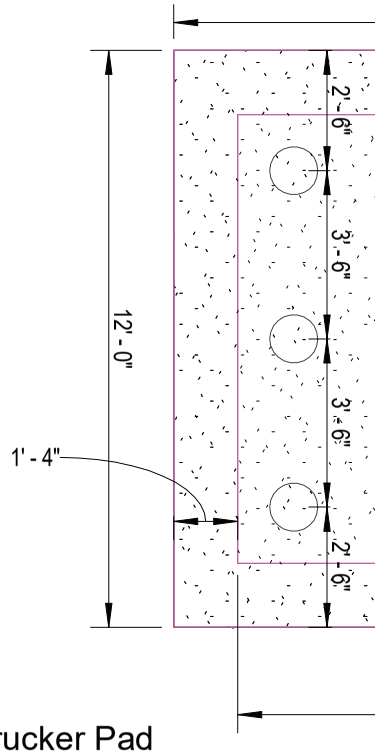

D Trucker Pad
1/4" = 1'-0"

AG PROPERTY

Revision:

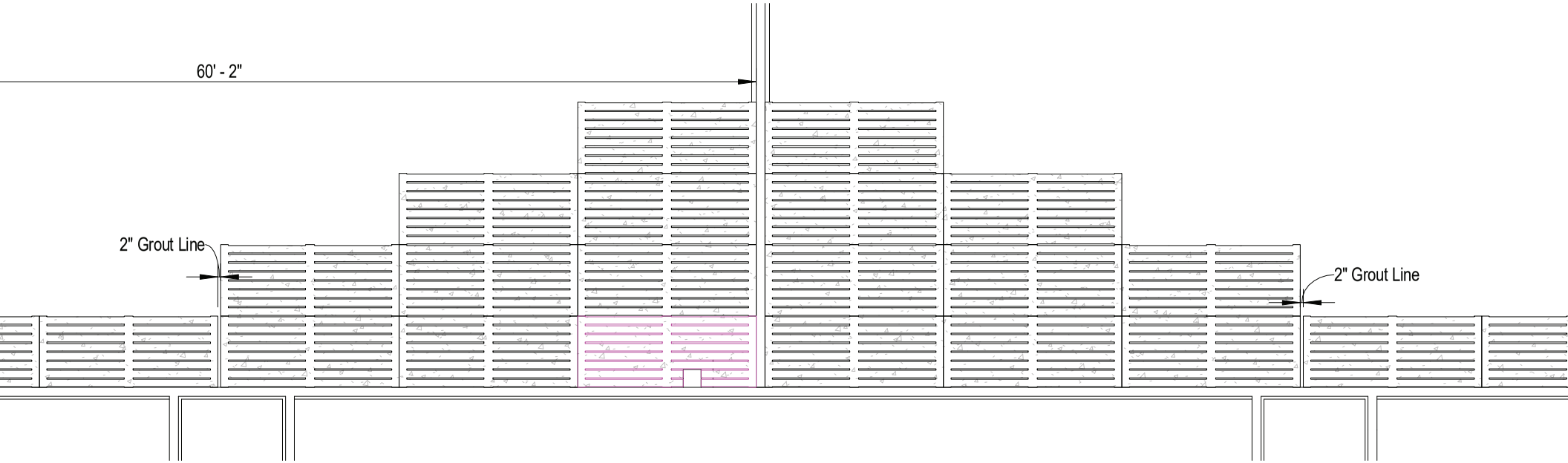

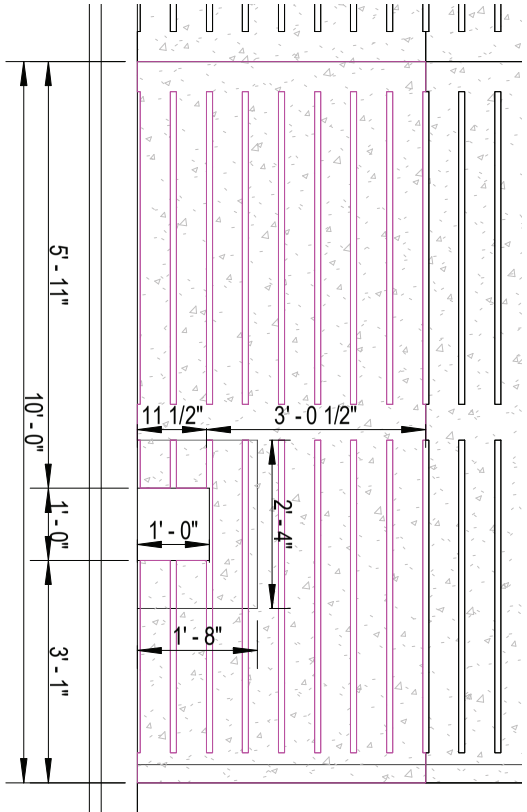

2 Incoing Water Slat

3/8" = 1' 0"

Revision:

AG PROPERTY

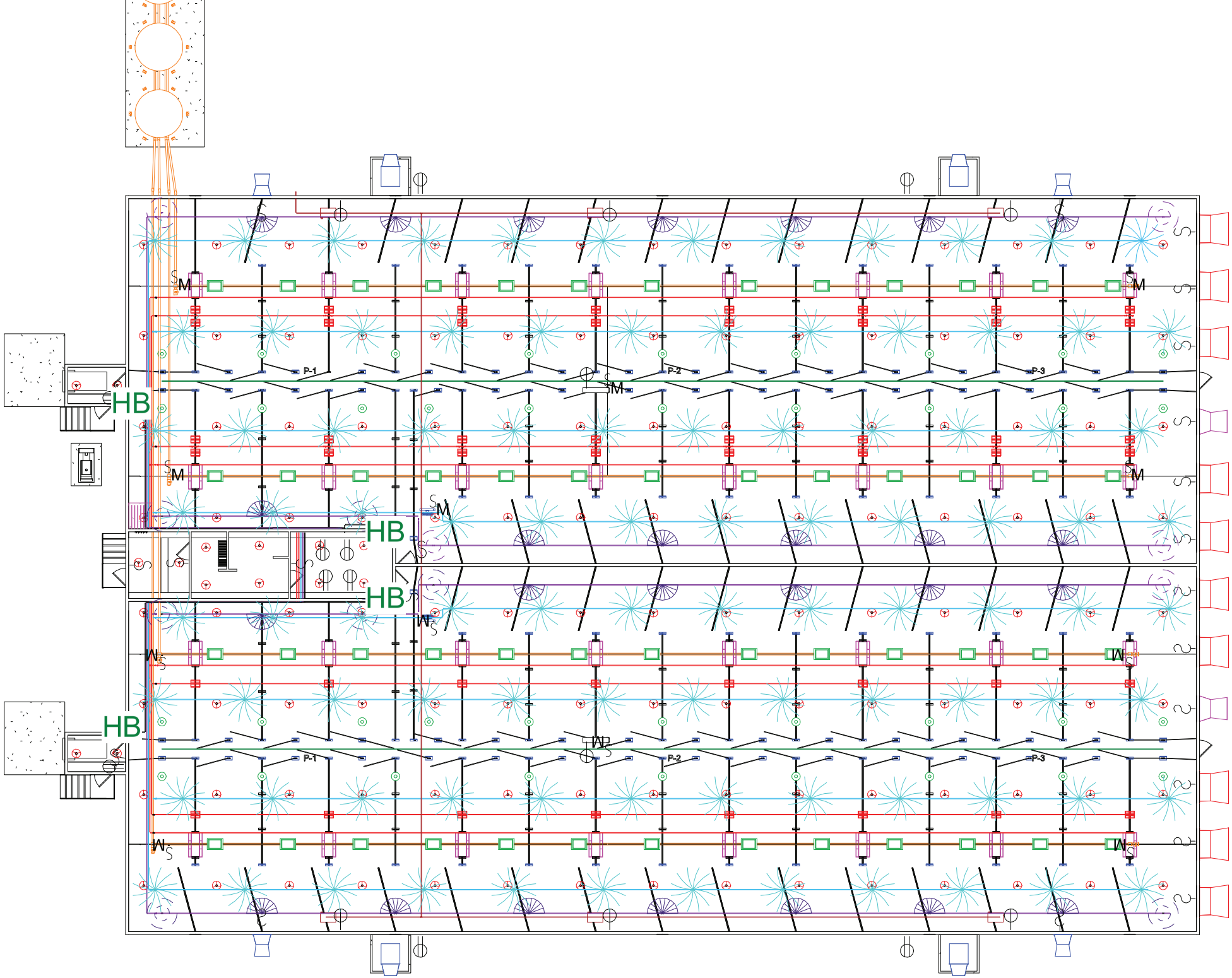

AG PROPERTY

Revision:

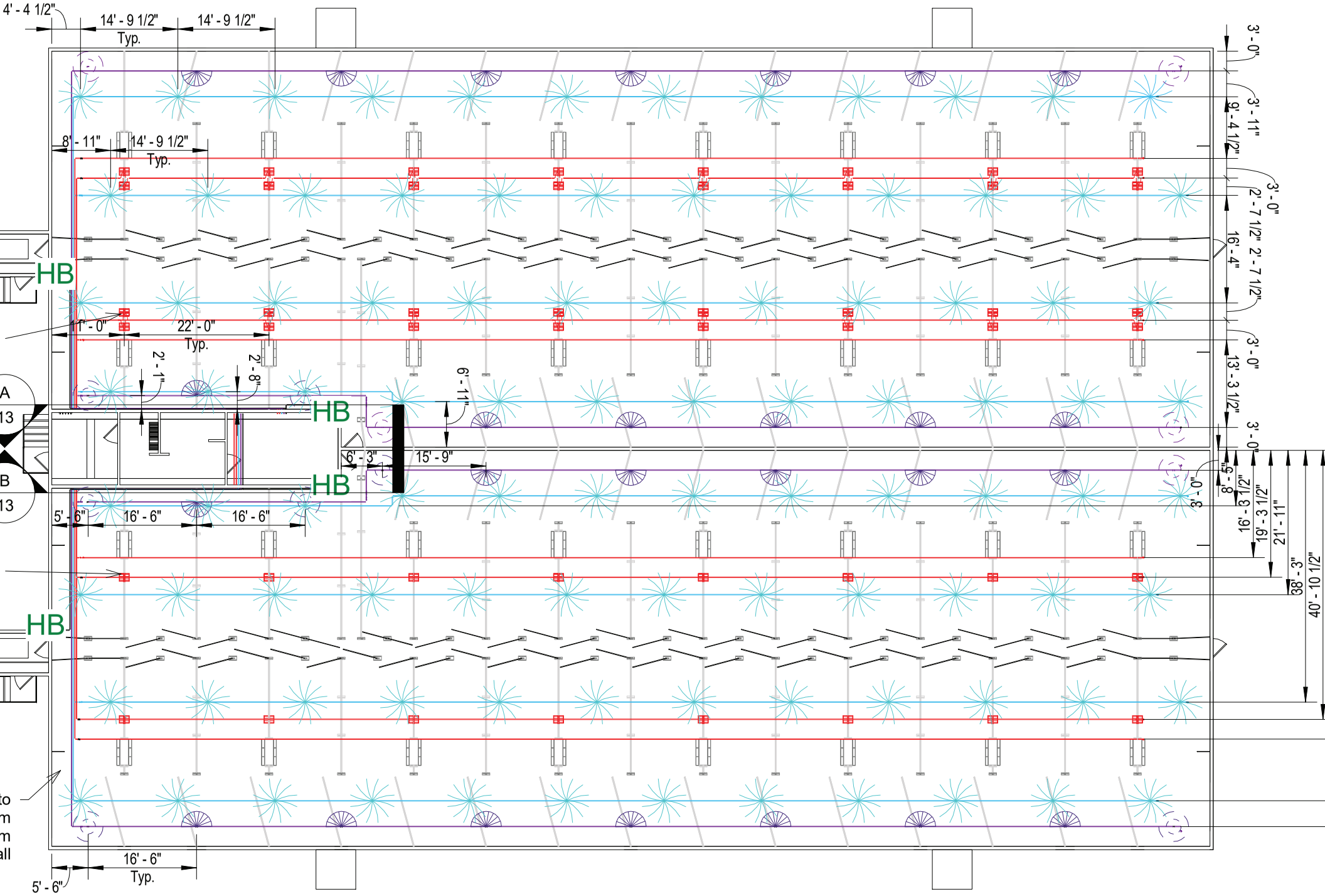

AG PROPERTY

Revision:

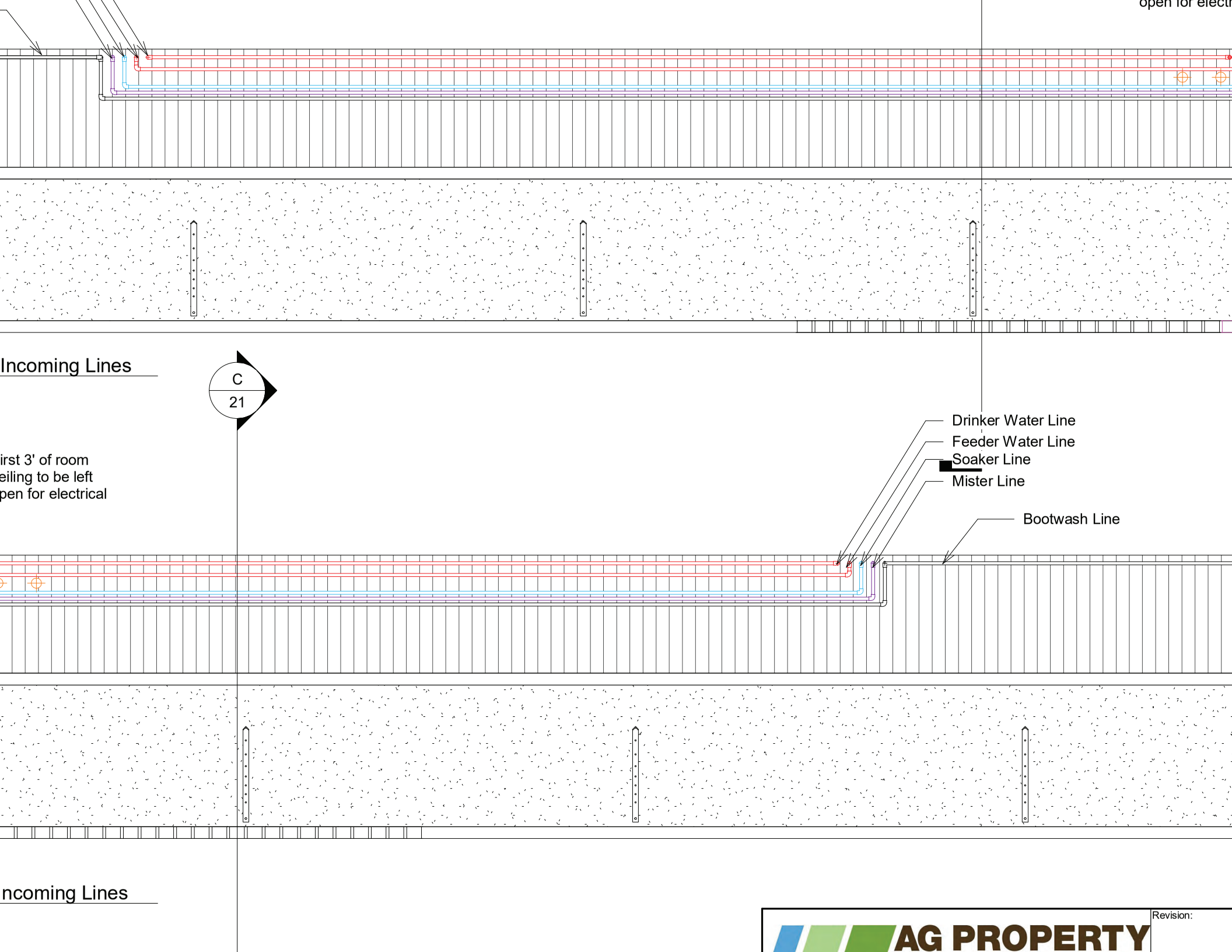

AG PROPERTY

Revision:

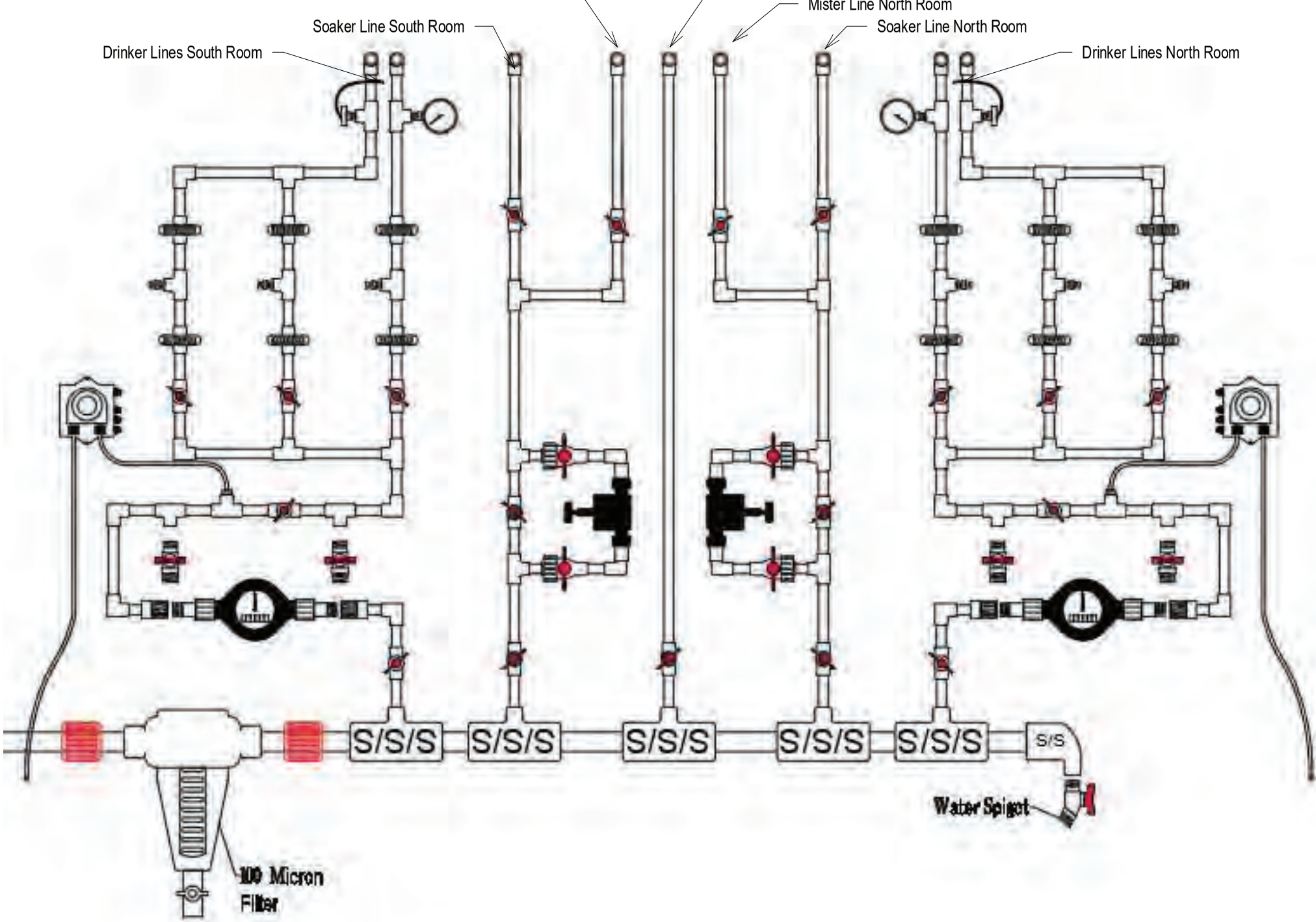

AG PROPERTY

Revision:

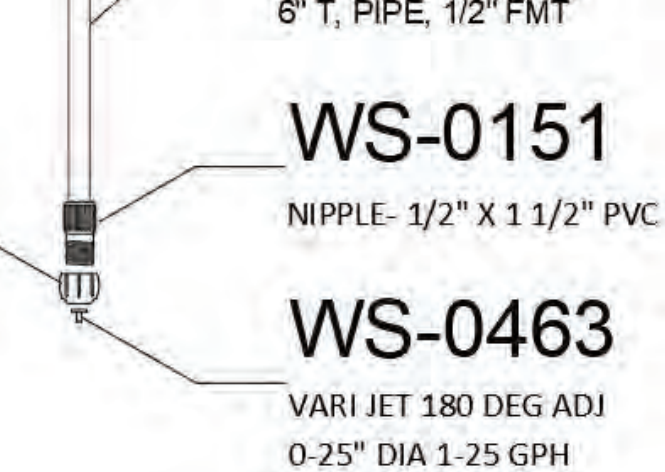

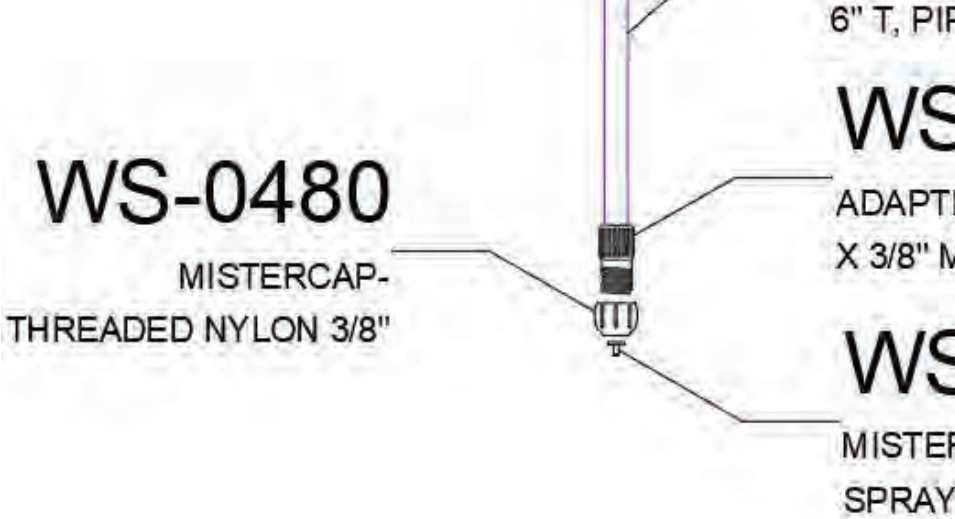

- 180 Degree

Mister - 360 Degr

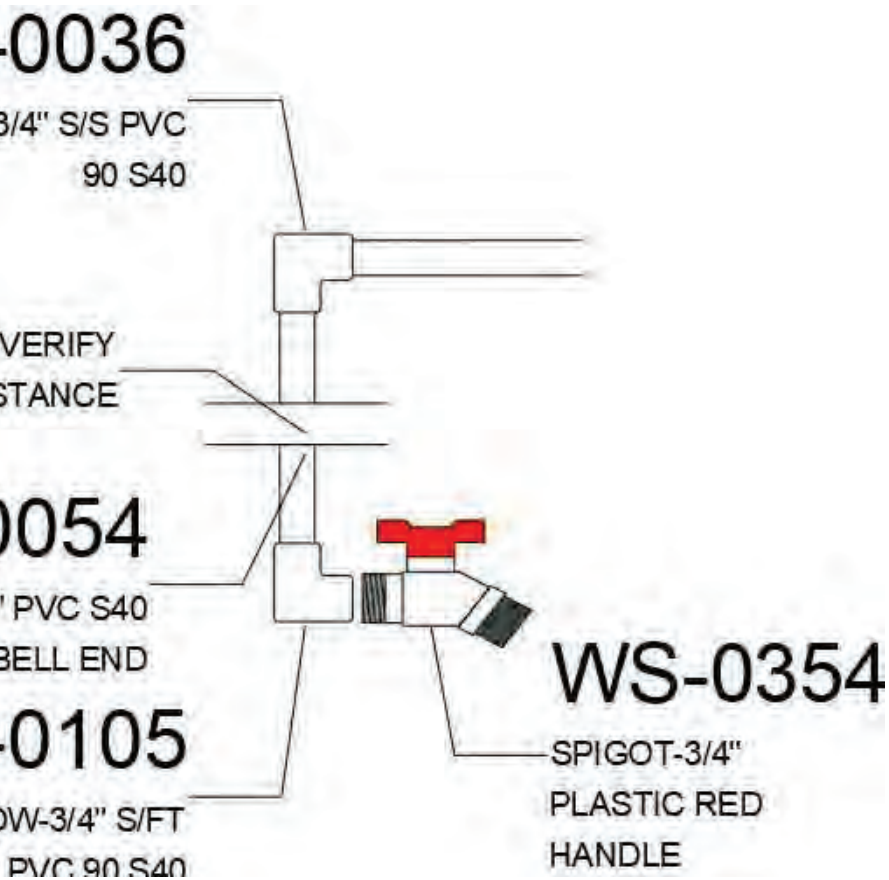

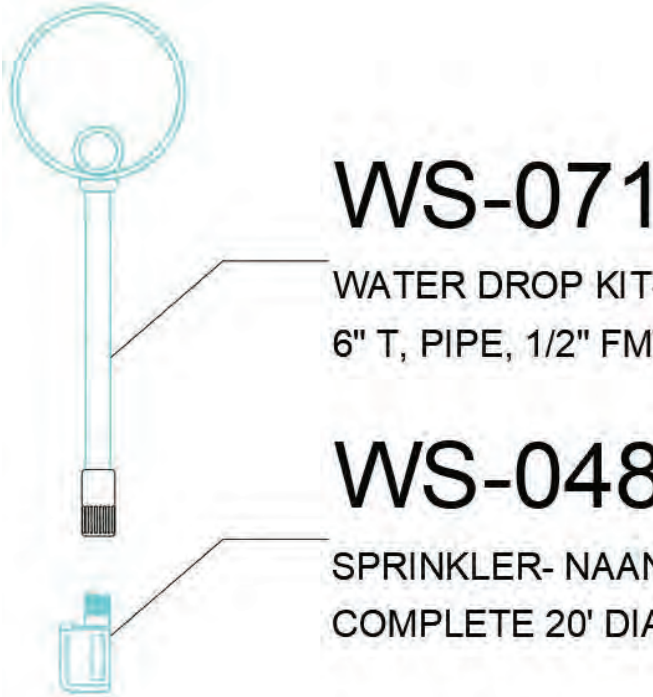

Soaker Drop

AG PROPERTY

Revision:

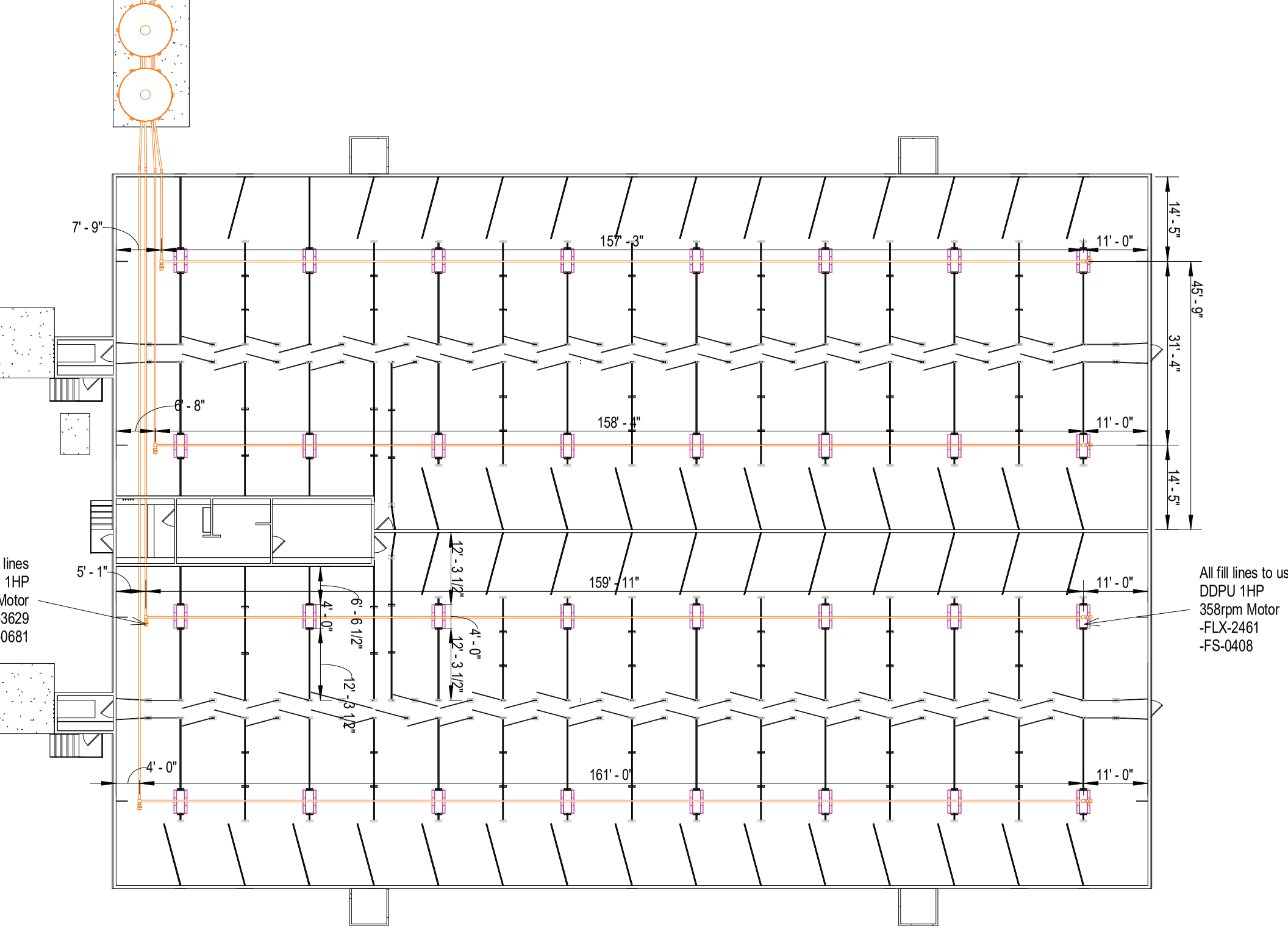

AG PROPERTY

Revision:

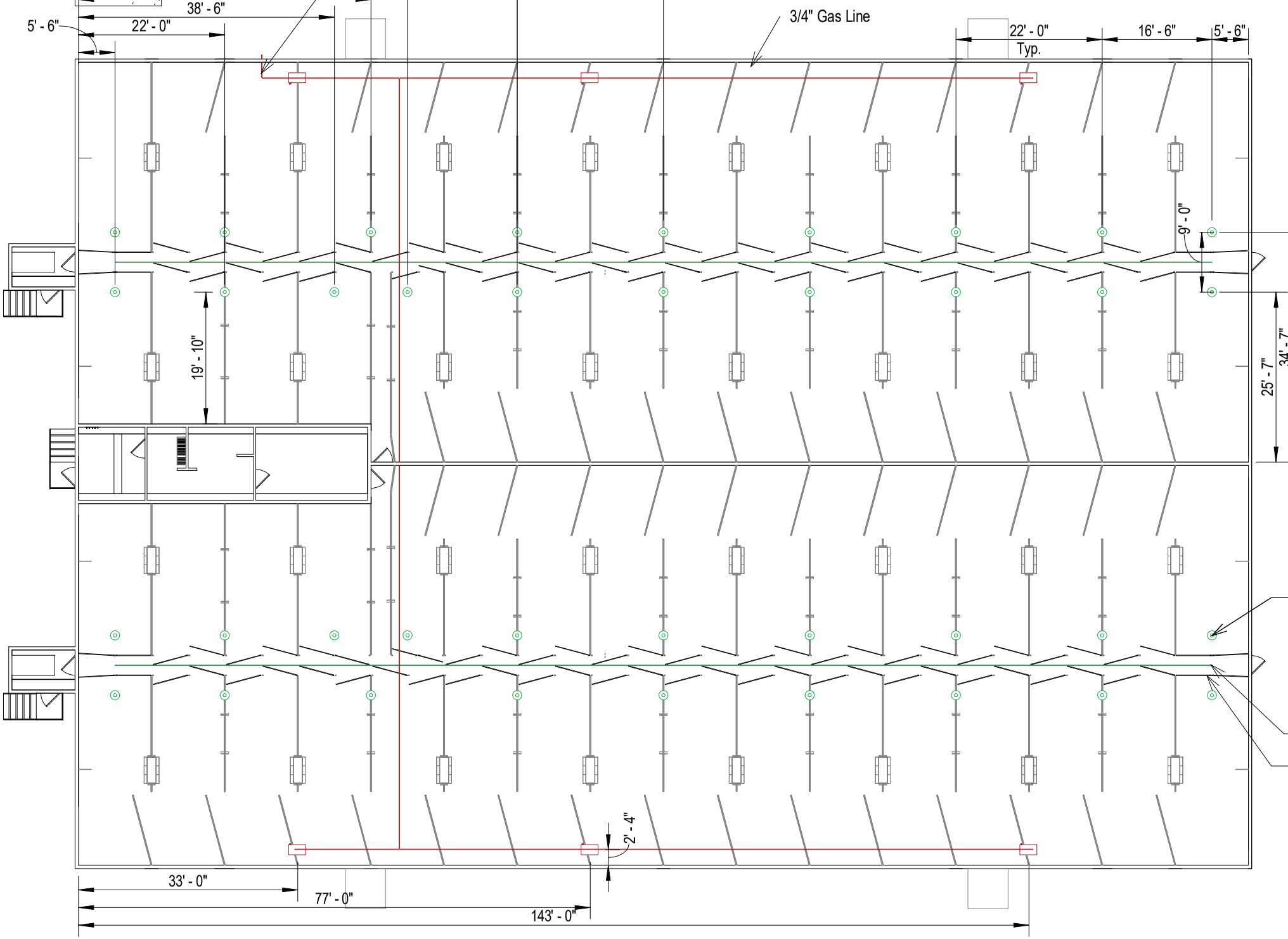

AG PROPERTY

Revision:

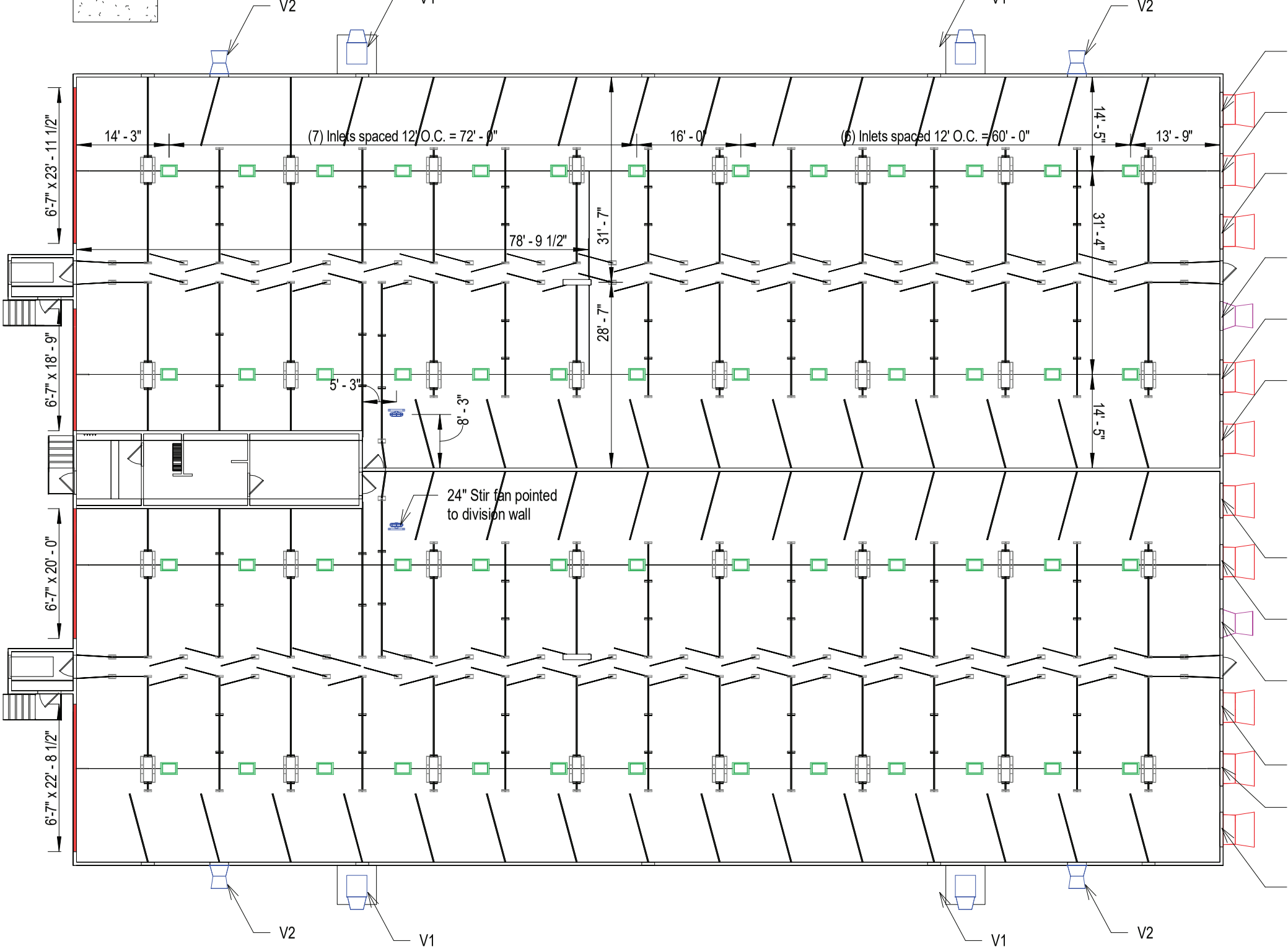

AG PROPERTY

Revision:

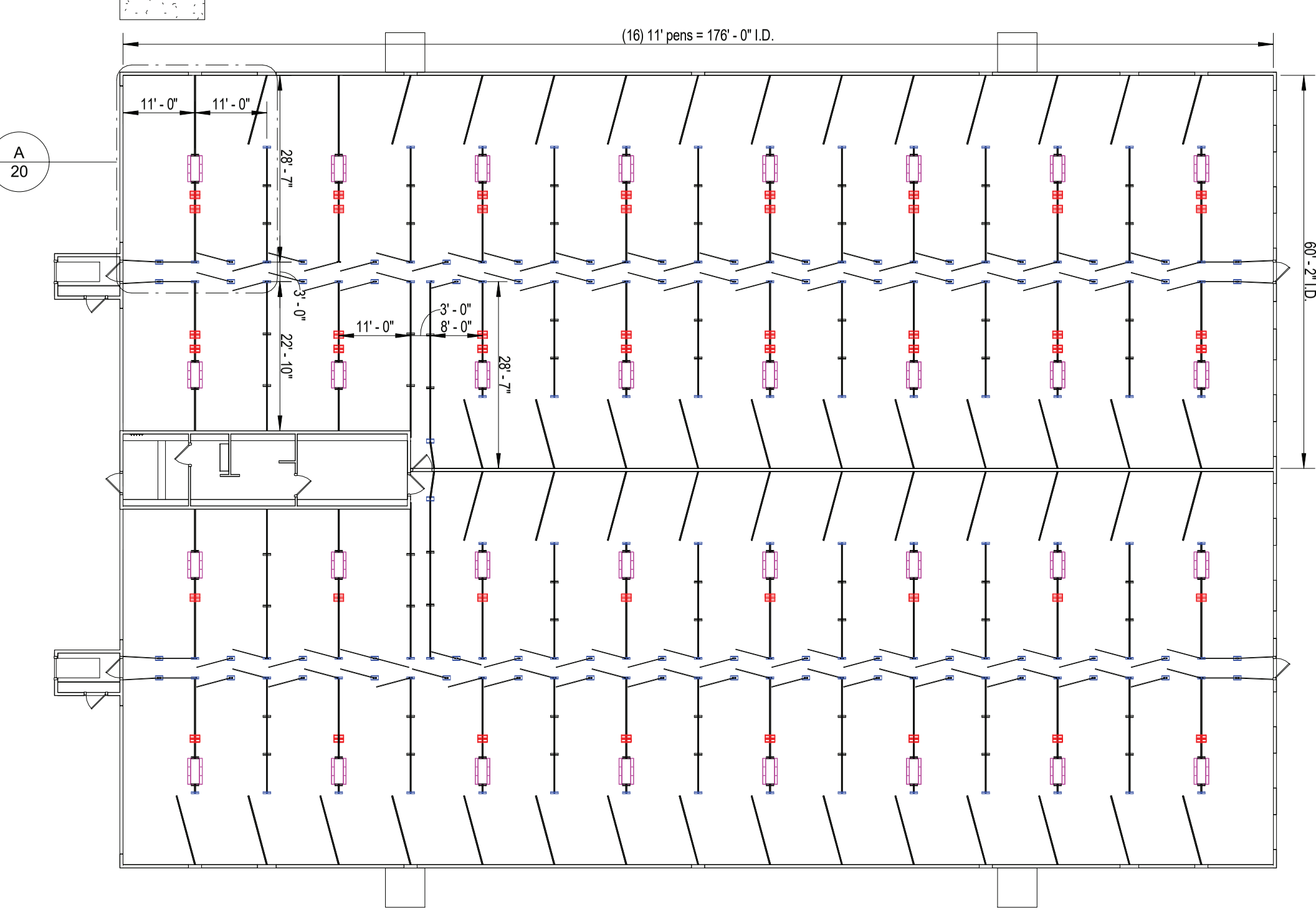

AG PROPERTY

Revision:

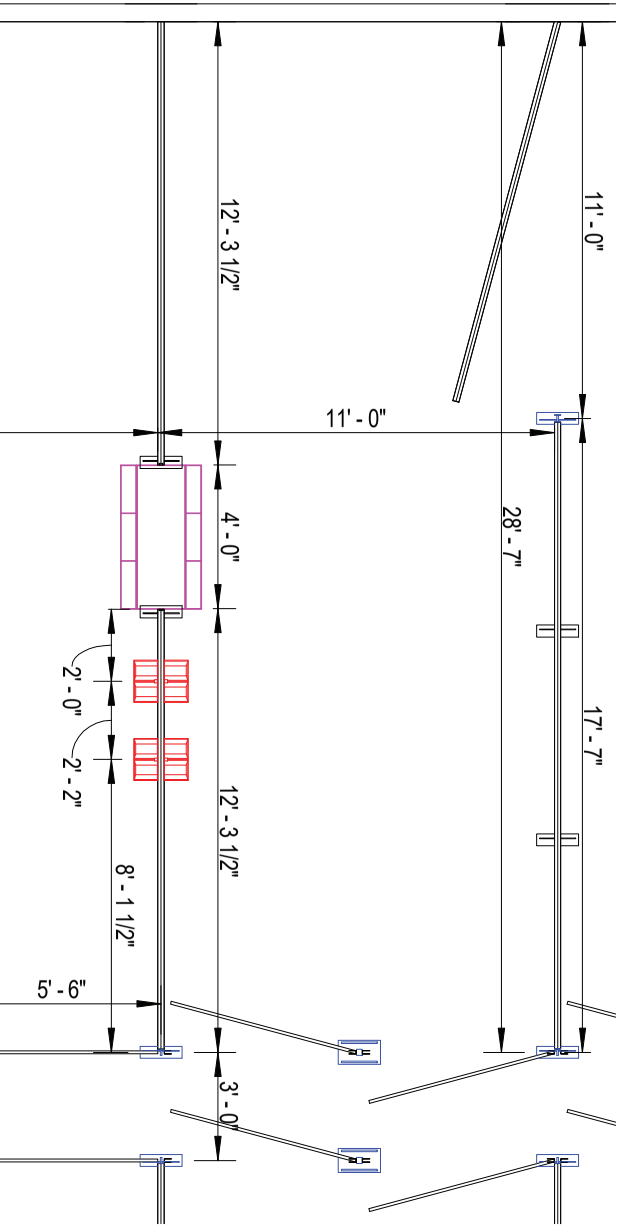

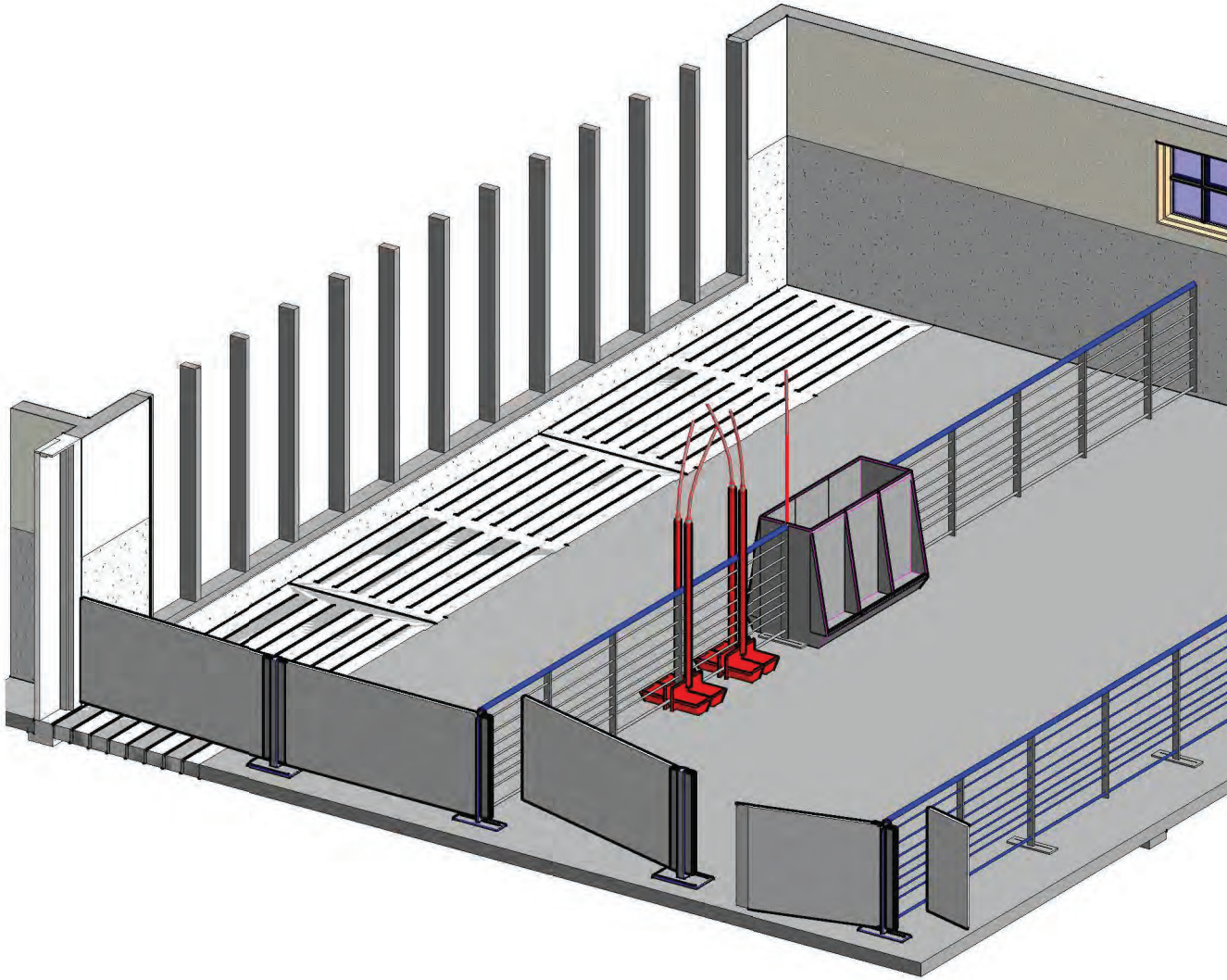

B Gating ISO

AG PROPERTY

Revision:

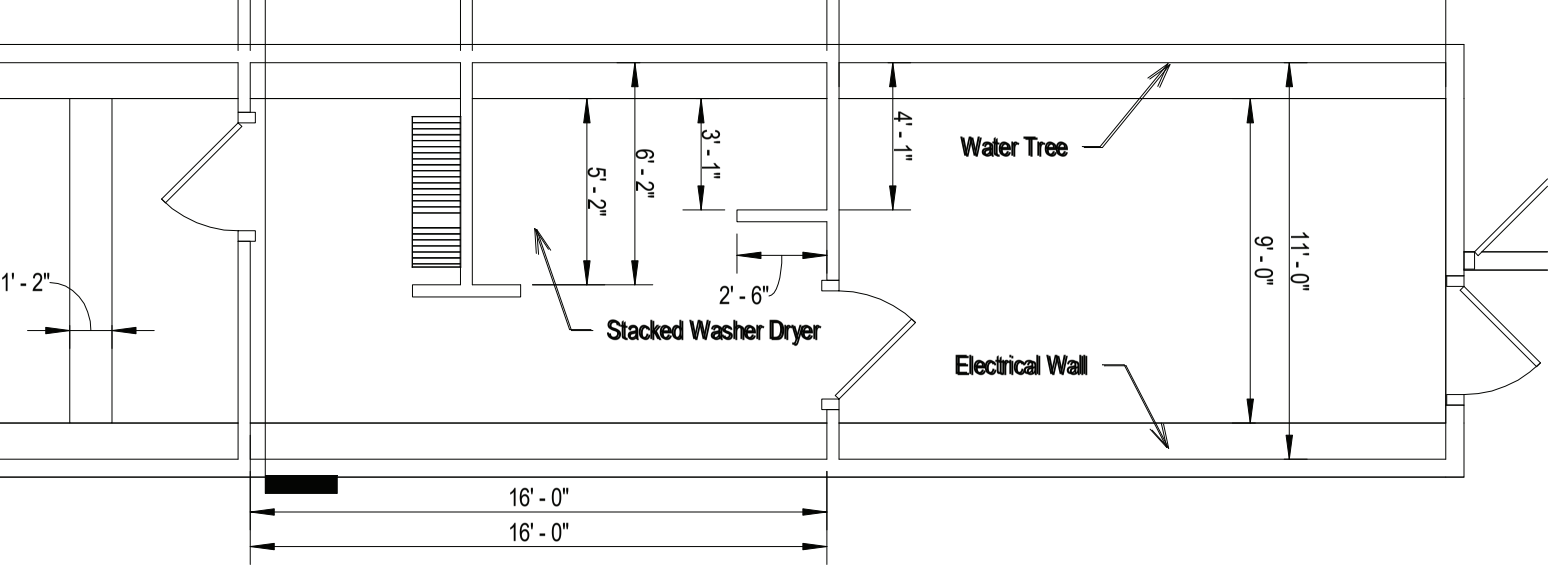

ion Plan

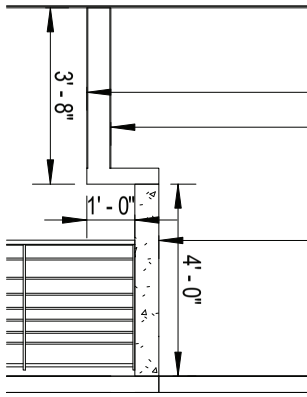

C Office Cross-Se
1/4" = 1'-0"

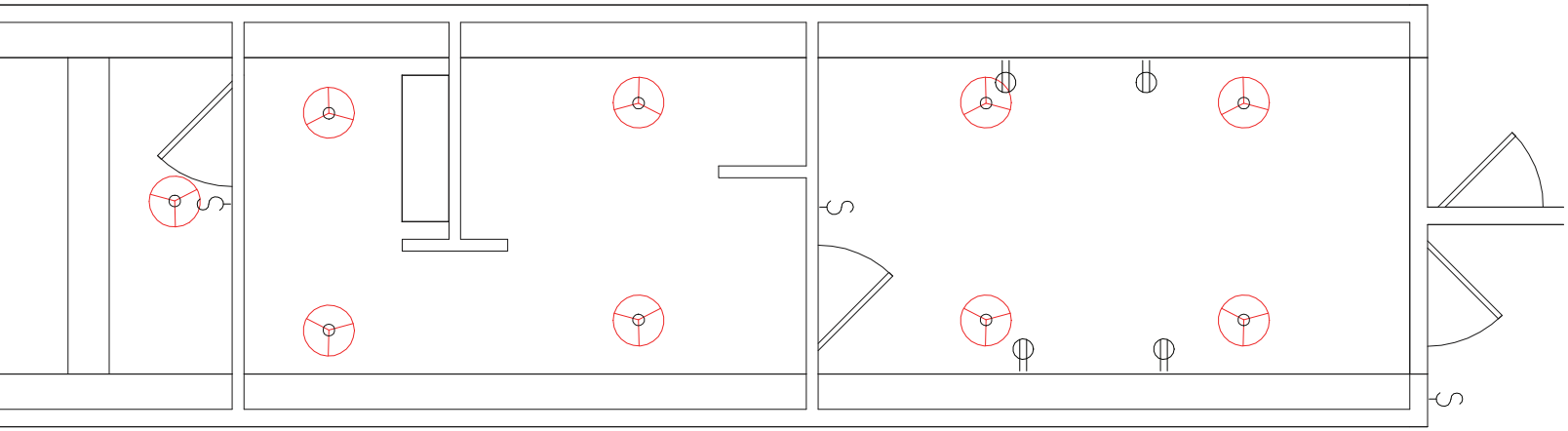

al Plan

AG PROPERTY

Revision:

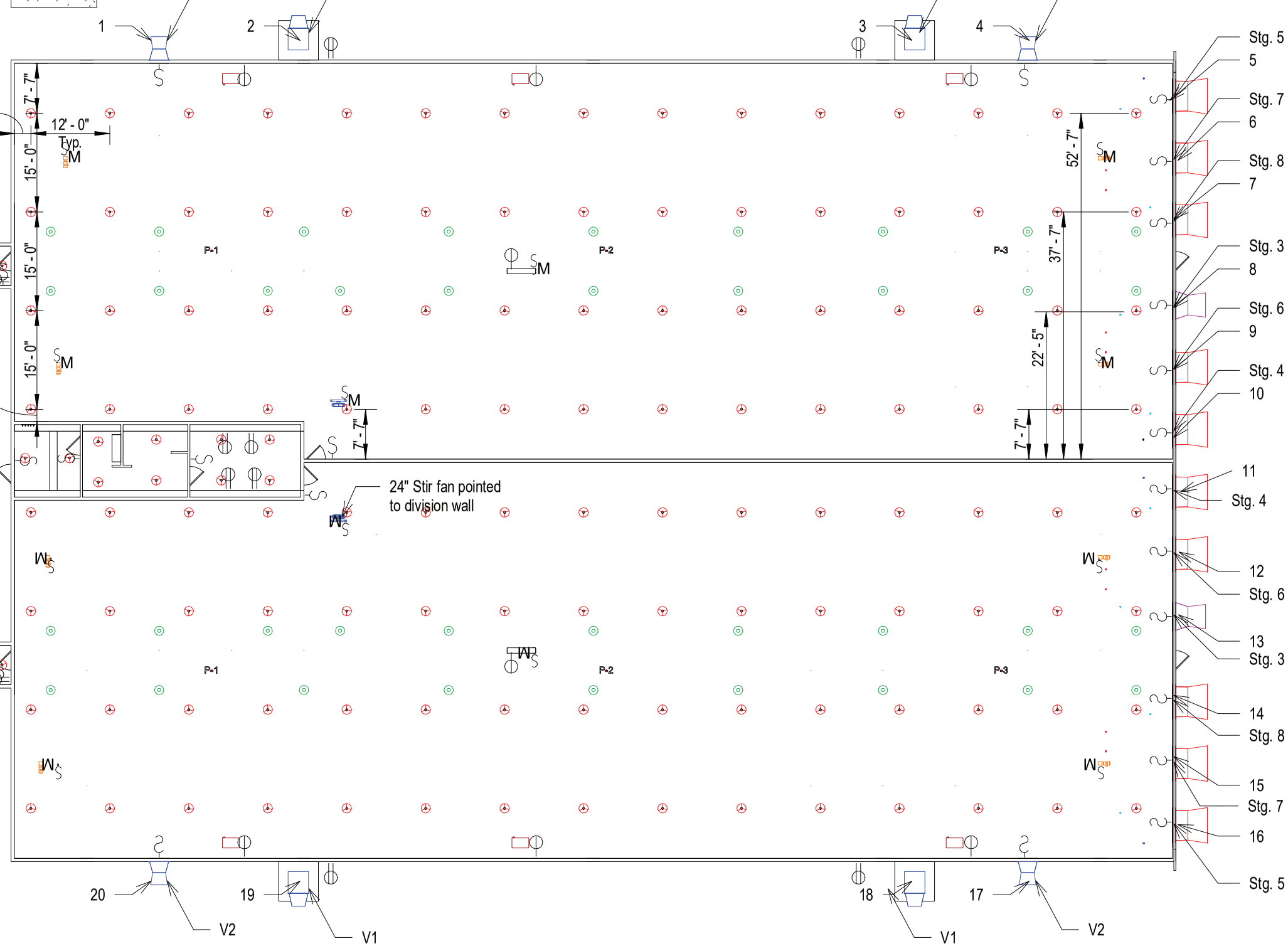

AG PROPERTY

Revision:

17	Plyco - 20 -
19	Top Hinge - Dura-Door - Lite
36	SDI - Lite

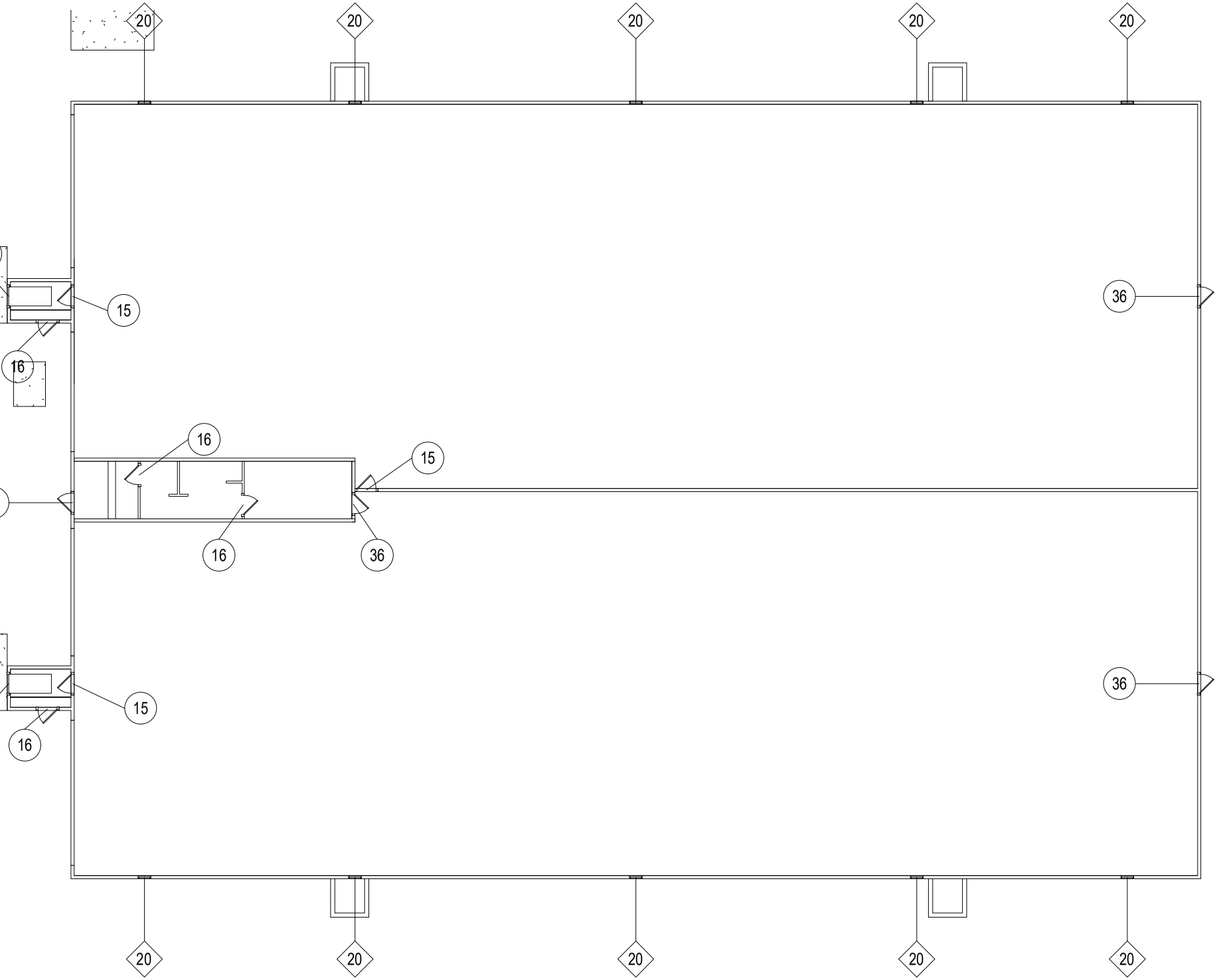

AG PROPERTY

Revision:

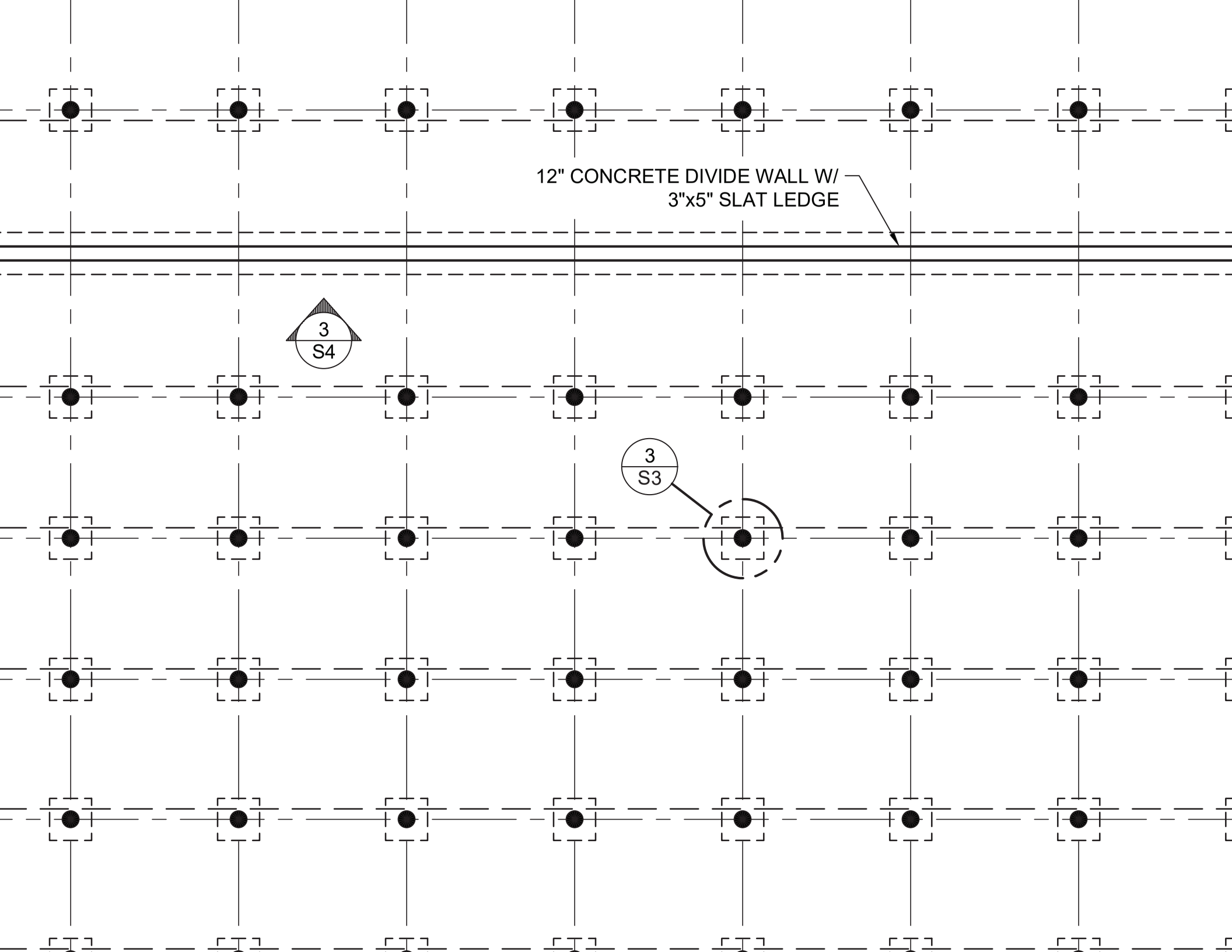
12" CONCRETE DIVIDE WALL W/
3"x5" SLAT LEDGE
3
S4
3
S3

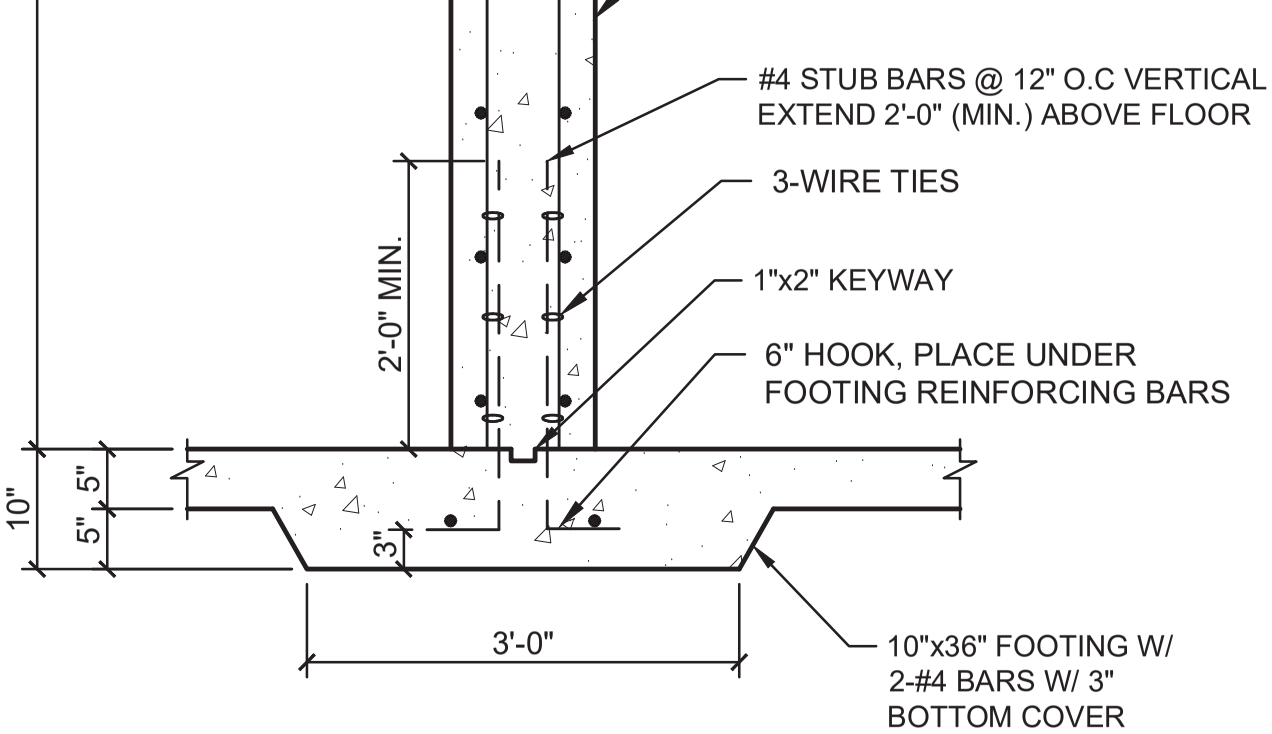

2
S2

12" DIVIDE WALL SECTION

SCALE 3/4" = 1'-0"

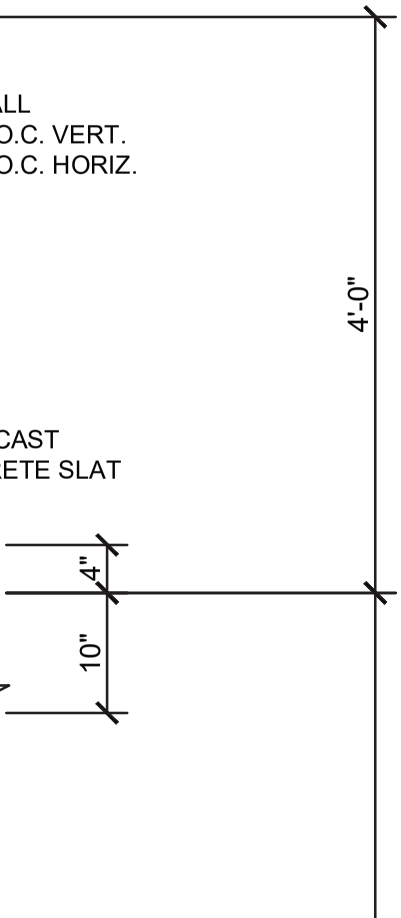

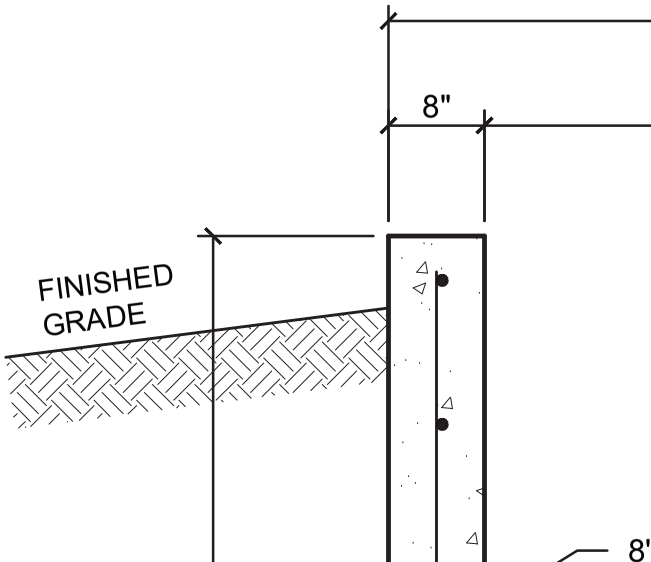

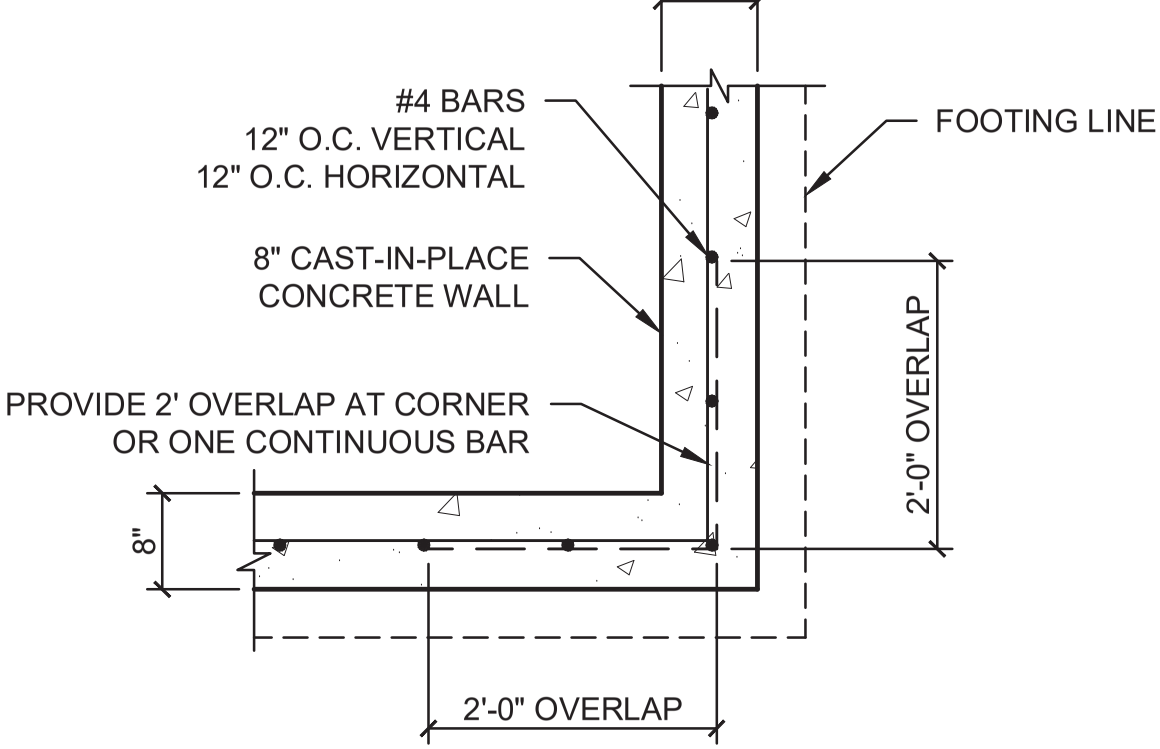

1
S3

CORNER DETAIL

SCALE 3/4" = 1'-0"

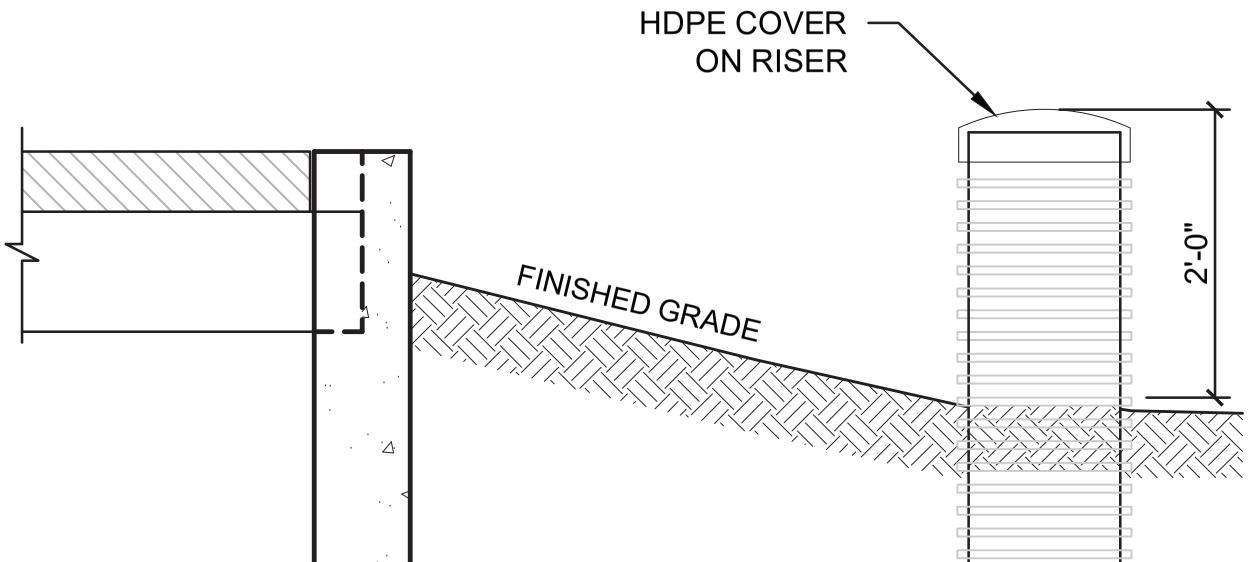

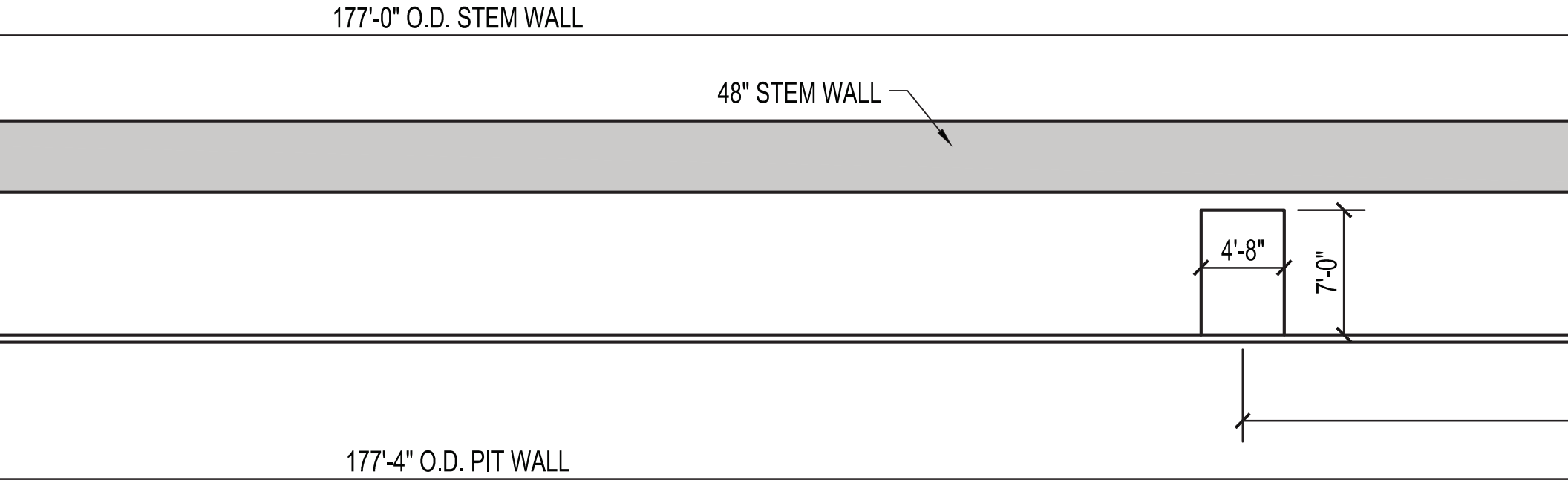

2
S4

SOUTH VIEW PIT WALL

SCALE 1/8" = 1'-0"

S5

SCALE 3/16" = 1'-0"

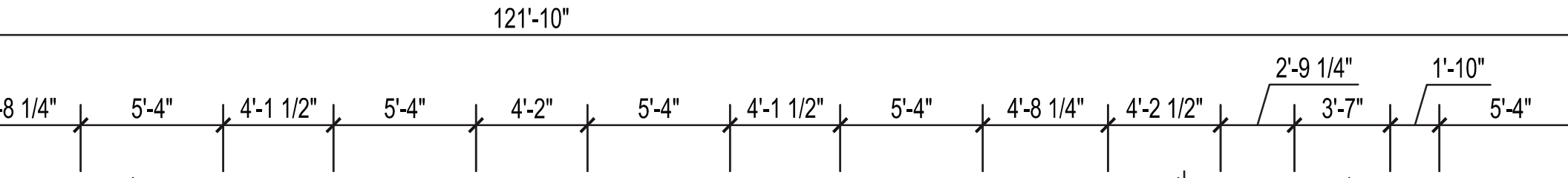

MINNESOTA POLLUTION CONTROL AGENCY
520 Lafayette Road North
St. Paul, MN 55155-4194

RECEIVED
JUL 14 2023
NICOLLET COUNTY PROPERTY SERVICES

Animal feedlot or manure storage area permit application

CSF and Interim Permit Program

Doc Type: Permit Application

Applicability: Use this form to obtain, modify, or extend the term of a construction short form (CSF) or interim permit when a feedlot meets both of the following:

- The feedlot is located in a delegated county.
  - Map of delegated counties: https://www.pca.state.mn.us/sites/default/files/wq-f1-12.pdf
- The feedlot does not meet or exceed a federal large Concentrated Animal Feeding Operation (CAFO) threshold.
  - Table of large CAFO thresholds: https://www3.epa.gov/npdes/pubs/sector_table.pdf

All other feedlots must use the MPCA online permit application service available at: https://webapp.pca.state.mn.us/services/login/. After completing and signing this form, submit it and any required enclosures to the County Feedlot Officer (CFO).

Keep a copy of this application form and all submittals for your records.

I. Permit type and reason for application

Feedlot Registration Number: _____

Please indicate which type of feedlot permit you are applying for *(choose only one)*:

☒ Construction Short Form ☐ Interim (correcting a pollution hazard)

Please indicate the reason for the permit application *(choose only one)*:

☒ New Permit
(No existing CSF or interim permit)

☐ Permit Modification
(Changes to sites with an existing CSF or interim permit)

☐ Permit Extension - Current CSF or Interim Permit number: _____
(Work not completed prior to permit expiration)

For extension requests only - Indicate below the reason(s) the work may not be completed prior to permit expiration

Estimated amount of time required to complete the work: _____ ☐ days ☐ months
Note: The length of the extension is limited to 24 months for CSF permits and 90 days for interim permits

Note: When the notice to neighbors and property owners is required the content of the notice must include the date the original permit was issued and the new proposed completion date as well as the normally required information.

II. Owner's name(s) and address(es) - (All partners of a Limited Liability Partnership (LLP) must be listed.)

Primary owner – Will be used as the mailing address

Name: Chuck Peters
Address: 41129 State Hwy 99
City: St. Peter State: MN
Phone: 507-931-1828 Zip: 56082
Email: petersfamilyfarm2@gmail.com

Additional owner – attach additional sheets as necessary

Name:
Address:
City: State:
Phone: Zip:
Email:

Note: *The term owner includes all persons having possession, control, or title to an animal feedlot or manure storage area (including lessees or renters). All owners must be listed. Attach to this application the names, addresses, and phone numbers of all additional owners.*

III. Facility name and site address

Site Name: Peters Finishing

☐ Facility is a MN Ag Water Quality Certified Farm (MAWQCP)

Complete if facility address is different than the primary owner address:

Street:
City: State: MN
Phone: Zip:

Contact person for day-to-day activities

Name: Nick Peters
Street: 41129 State Hwy 99
City: St. Peter State: MN
Phone: Zip: 56082
Cell phone: 507-381-5256
Email: petersfamilyfarm1@gmail.com
(General letters/notices may be sent by email where one is indicated.)

IV. Facility location

RECEIVED
JUL 14 2023
NICOLLET COUNTY
PROPERTY SERVICES

County: Nicollet Township name: Oshawa

Township (26 – 71 or 101 – 168)	Range (1 – 51)	Section (1 – 36)	¼ Section (160 acre) (NW, NE, SW, SE)	¼ of ¼ Section (40 acre) (NW, NE, SW, SE)
T 110 @ 109 N	R 28@27 W	32	SE 1/4	SE 1/4

V. Sensitive features

1. Is any part of the facility within 1,000 feet of any type of surface waters or tile intake? ☒ Yes ☐ No

   If Yes, select all types below

   ☐ Lake ☐ River ☐ Stream (Perennial or Intermittent) ☒ Tile Intake
   ☐ Pond ☐ Creek ☐ Ditch ☐ Wetland ☐ Calcareous Fen ☐ Unknown

2. Is any part of the facility located within 300 feet of a river/stream? ☐ Yes ☒ No
3. Is any part of the facility located within a delineated flood plain *(100 year flood)*? ☐ Yes ☒ No
4. Is any part of the facility located within designated shoreland? ☐ Yes ☒ No
5. Is any part of the facility located within 1,000 feet of a karst feature? ☐ Yes ☒ No
   (sinkholes, caves, disappearing springs, resurgent springs, karst windows, dry valleys, or blind valleys)

   If Yes, complete a. and b. below:

   a. Are there 4 or more sinkholes within 1,000 feet? ☐ Yes ☒ No
   b. Is any part of the facility within 300 feet of a known sinkhole? ☐ Yes ☒ No

6. Is any part of the facility located within 1,000 feet of a well: ☐ Yes ☒ No

   If Yes, complete a. and b. below:

   a. What is the shortest distance from a well to any animal holding area? _____ ft.
      What is the shortest distance from a well to any manure storage area? _____ ft.
   b. Indicate if the well is any of the following types:
      ☐ a community water supply well
      ☐ a well serving a public school as defined under Minn. Stat. § 120A.05
      ☐ a well serving a private school excluding home school sites
      ☐ a well serving a licensed child care center where the well is vulnerable (Minn. R. 4720.5550, subp. 2)

VI. Environmental Review (complete when construction or expansion is proposed)

Mandatory environmental review is required for the addition of 1,000 or more animal units (AU) at any facility. This threshold is reduced to 500 AU in "sensitive areas". The facility is within a sensitive area when any of the following apply.

- Any part of the facility is within a delineated floodplain (yes to question 3 above)
- Any part of the facility is within designated shoreland (yes to question 4 above)
- Any part of the facility is within 1,000 feet of a karst feature (yes to question 5 above)
- Any part of the facility is within a vulnerable drinking water supply management area
- Any part of the facility is within a federal, state, or local wild and scenic river district
- Any part of the facility is located within the Minnesota River Project Riverbend area or the Mississippi headwaters area

Additionally mandatory environmental review is required for "Phased actions". Phased actions are two or more projects located in the same geographic area and constructed within three years of each other by the same proposer. When this is the case, the animal units from all projects are combined to determine if environmental review is required.

Do you have ownership interest in another livestock operation that was constructed/expanded within the past three years or are you substantially certain you will be constructing/expanding another livestock operation within the next three years?

☐ Yes ☒ No

If Yes, how far away *(straight-line distance)* is it located from the project proposed in this application? _____ miles

There are also rule provisions to require completion of the environmental review process in the event of a citizen petition or upon the discretion of the MPCA. Please see the MPCA fact sheet entitled "When is Environmental Review Required for Feedlots" (available on the MPCA website at https://www.pca.state.mn.us/quick-links/environmental-review and/or Minn. R. 4410 for further details.

VII. Animal numbers and animal unit (AU) calculation

RECEIVED
JUL 14 2023
MPCA-SOLID WASTE
FACILITIES

Complete the table below to identify the **maximum** number of animals housed at that facility. All animal numbers and animal sizes used to complete this table should reflect the animal holding **capacity** of the facility even if the facility does not currently house or propose to house that number of animals. At no time is the number of animals at the facility allowed to exceed the capacity provided below without first obtaining a permit or permit modification.

Current Capacity - List the current head count **capacity** for each animal type in column 3 below. For sites with a permit, this should match the currently permitted number of animals. Next, multiply the AU Factor in column 2 by the number of animals listed in column 3 to get the *Current AU Capacity* for each animal type (column 4). Finally, add together all AU's in column 4 to get a total at the bottom of the chart. *If this application is for a brand-new feedlot site leave columns 3 and 4 blank. (i.e., bare piece of ground)*

Final Capacity - List the final head count **capacity** for each animal type in column 5 below. This number should include current animals plus or minus any expansion or reduction in each animal type. This should reflect the maximum AU capacity requested with this permit application. Next, multiply the AU Factor in column 2 by the number of animals listed in column 5 to get the *Final AU Capacity* for each animal type (column 6). Finally, add together all AU's in column 6 to get a total at the bottom of the chart.

		***Current* facility capacity**		***Final* facility capacity** (Current +/- Changes)	
1. Animal type	**2. Animal unit factor**	**3. Head count**	**4. Animal units** = column 2 x column 3	**5. Head count**	**6. Animal units** = column 2 x column 5
A. Dairy cattle					
Mature cow (milked or dry) over 1,000 lbs.	1.4				
Mature cow (milked or dry) under 1,000 lbs.	1.0				
Heifer	0.7				
Calf	0.2				
B. Veal					
Veal	0.2				
C. Beef cattle					
Slaughter steer/heifer, stock cow, or bull	1.0				
Feeder cattle (stocker or backgrounding), heifer	0.7				
Cow and calf pair	1.2				
Calf (weaned)	0.2				
D. Swine					
Over 300 lbs.	0.4				
Between 55 and 300 lbs.	0.3			2480	744
Under 55 lbs.	0.05				
E. Horses					
Horse	1.0				
F. Sheep					
Sheep or Lamb	0.1				
G. Chickens with a *liquid* manure system					
Layer Hens or Broilers	0.033				
H. Chickens with a *dry* manure system					
Broilers over 5 lbs.	0.005				
Broilers under 5 lbs.	0.003				
Layer Hens over 5 lbs.	0.005				
Layer Hens under 5 lbs.	0.003				
I. Turkeys					
Over 5 lbs.	0.018				
Under 5 lbs.	0.005				
J. Ducks					
Duck (with a liquid manure handling system)	0.01				
Duck (with a dry manure handling system)	0.01				
K. Animals not listed in A to J (AU factor in column 2 = average weight of the animal type divided by 1,000 lbs.)					
Animal type:					
Total animal unit capacity			**Current AU capacity**		**Final AU capacity**
Add all numbers in column 4 for Current AU total					
Add all numbers in column 6 for Final AU total					**744**

VIII. Animal holding areas

Do any animals at the facility have access to pasture? ☐ Yes ☒ No

Complete the table below for the following animal holding areas. If needed, continue your list on an additional copy of this page.

1. **Total confinement barn with underfloor pit** - A barn where animals cannot access an outdoor area and liquid manure enters storage directly beneath the floor. This includes "shallow pits" or "pull plugs".
2. **Total confinement barn** - A barn where animals cannot access an outdoor area.
3. **Partial confinement barn** - A barn where animals can directly access an outdoor area (i.e., associated open lot).
4. **Open lot** - An uncovered area where animals are housed outdoors.
5. **Individual animal housing area** - A structure that houses only one animal at a time (i.e., calf huts/hutches).
6. **Working-Sorting-Hospital area** - A structure or area, covered or uncovered, where animals temporarily enter during load-out or load-in events or when additional care is needed to address medical issues with the animal.
7. **Milk parlor-Holding area** - A structure or area where animals temporarily enter prior to or during milking.

RECEIVED
JUL 14 2023
NICOLLET COUNTY
PROPERTY SERVICES

List each animal holding area in a separate column

Animal holding area ID	*Use the far right column for non-rectangular holding areas*					*Non-Rectangular*
Facility Site Sketch ID (i.e., #1, A, Barn 1)	1					
Status: (check one box only) *Proposed* - not permitted previously or permitted but not yet operational *Existing* - current operational component	☒Proposed ☐Existing ☐Eliminating	☐Proposed ☐Existing ☐Eliminating	☐Proposed ☐Existing ☐Eliminating	☐Proposed ☐Existing ☐Eliminating	☐Proposed ☐Existing ☐Eliminating	☐Proposed ☐Existing ☐Eliminating

List approximate holding area dimensions in feet

Type of animal holding areas	*(If non-rectangular, use the far right column and list surface area)* *Length X Width*	*Length X Width*	*Length X Width*	*Length X Width*	*Length X Width*	*Non-Rectangular (Surface Area)*
Total confinement barn with underfloor pit	122 X 177	X	X	X	X	sq. ft
Underfloor pit maximum depth (ft)	Pit Depth: 8	Pit Depth:	Pit Depth:	Pit Depth:	Pit Depth:	Pit Depth:
Underfloor pit volume (gal)	1,059,100gal	gal	gal	gal	gal	gal
Total confinement barn	X	X	X	X	X	sq. ft
Partial confinement barn	X	X	X	X	X	sq. ft
Associated open lot dimensions (list area for non-rectangular lots)	X sq. ft	X sq. ft	X sq. ft	X sq. ft	X sq. ft	X sq. ft
Open lot	X	X	X	X	X	sq. ft
Individual animal housing area (i.e., calf huts/hutches that house one animal)	X Quantity:	X Quantity:	X Quantity:	X Quantity:	X Quantity:	sq. ft Quantity:
Working-Sorting-Hospital area	X	X	X	X	X	sq. ft
Milk parlor-Holding area	X	X	X	X	X	sq. ft
Other buildings for animal husbandry	X	X	X	X	X	sq. ft

Indicate the maximum capacity (number of animals) of each animal holding area

Animal numbers	*The total number of all animals listed should match the final animal numbers listed on page 3.*					
Mature dairy cows (over 1,000 lbs.)						
Mature dairy cows (under 1,000 lbs.)						
Dairy heifers						
Dairy calves						
Veal						
Slaughter steer/heifer, stock cow or bull						
Feeder cattle-stocker/background/heifer						
Cow and calf pair						
Beef calves (weaned)						
Swine over 300 lbs.						
Swine between 55 and 300 lbs.	2480					
Swine under 55 lbs.						
Horses						
Sheep or lamb						
All chickens with liquid manure system						
Broiler chickens over 5 lbs. - dry system						
Broiler chickens under 5 lbs. - dry system						
Laying hens over 5 lbs. - dry system						
Laying hens under 5 lbs. - dry system						
Turkeys - over 5 lbs.						
Turkeys - under 5 lbs.						
Other:						

IX. Liquid Manure Storage Areas (LMSA)

RECEIVED
JUL 14 2023
NICOLLET COUNTY
PROPERTY SERVICES

Complete the table below for all your LMSAs based upon liner type. If needed, continue your list on an additional copy of this page.

Additional Instructions:

1. **Do not list below barn LMSAs in this table** – This information has been captured in the animal holding areas table.
2. LMSAs with more than one liner type - List this LMSA in the category that represents the sidewall primary liner type.
   For example: a LMSA with a concrete floor and earthen sidewalls should be listed in the LMSA - Earthen category.
3. LMSAs with dual liners, which is a primary liner underlain by a secondary liner (typically only in karst susceptible areas) - List the LMSA in the category that represents the primary liner; which is, the liner in direct contact with the manure.
   For example: a HDPE plastic lined LMSA underlain by a compacted clay liner should be listed in the LMSA - Synthetic category.
4. Use the two right columns for circular and other non-rectangular shapes.

LMSA ID	***List each LMSA in a separate column***					*Circular*	*Non-Rectangular*
Facility Site Sketch ID							
Status: (check only one) *See animal holding area table for definitions*	☐Proposed ☐Existing ☐Eliminating	☐Proposed ☐Existing ☐Eliminating	☐Proposed ☐Existing ☐Eliminating	☐Proposed ☐Existing ☐Eliminating	☐Proposed ☐Existing ☐Eliminating	☐Proposed ☐Existing ☐Eliminating	☐Proposed ☐Existing ☐Eliminating

Type of LMSA Liner *Do not list below barn LMSAs*	***List approximate LMSA dimensions in feet*** *(If non-rectangular, use the appropriate column and list diameter or surface area)* *Length X Width*	*Length X Width*	*Length X Width*	*Length X Width*	*Length X Width*	*Circular*	*Non-Rectangular (Surface Area)*
LMSA - Earthen Maximum depth (ft)	X Depth:	X Depth:	X Depth:	X Depth:	X Depth:	Diameter: Depth:	sq. ft Depth:
LMSA - Concrete Maximum depth (ft)	X Depth:	X Depth:	X Depth:	X Depth:	X Depth:	Diameter: Depth:	sq. ft Depth:
LMSA – Synthetic [a] Maximum depth (ft)	X Depth:	X Depth:	X Depth:	X Depth:	X Depth:	Diameter: Depth:	sq. ft Depth:
LMSA – GCL [b] Maximum depth (ft)	X Depth:	X Depth:	X Depth:	X Depth:	X Depth:	Diameter: Depth:	sq. ft Depth:
LMSA – Steel tank [c] Maximum depth (ft)	X Depth:	X Depth:	X Depth:	X Depth:	X Depth:	Diameter: Depth:	sq. ft Depth:
LMSA – Other Maximum depth (ft)	X Depth:	X Depth:	X Depth:	X Depth:	X Depth:	Diameter: Depth:	sq. ft Depth:

List the LMSA volume in gallons							
Volume of LMSA (gal)							

a. Synthetic liners include all plastic or rubber liners (HDPE, EPDM, LDPE, LLDPE, PVC, etc.).
b. GCL refers to all types of geosythetic clay liners where bentonite clay is confined between two synthetic membranes (i.e., bentomat®).
c. Steel tank refers to above ground steel tanks including those with concrete floors (i.e., slurrystore®).

X. Other Facility Components

Complete the table below for the following facility components. If needed, continue your list on an additional copy of this page.

1. **Permanent Stockpile** - An area where solid manure is stored or processed. Do not list temporary stockpiles
2. **Feed Storage Area** - Areas where any type of feed is stored in outdoor piles/bunkers, including those covered with plastic. **DO NOT** list vertical silos, grain bins, commodity sheds, or other totally enclosed structures.
3. **Mortality Compost Area** - **ONLY** list mortality management areas that compost dead animals with litter or manure.
4. **Vegetated Infiltration Area (VTA)** - A vegetated area with berms on all sides so that liquid can only leave via infiltration into the soil.
5. **Filter-Buffer Strip** - A vegetated area where liquid flows over a grassed area and is allowed to leave the area via surface flow.

Component ID	***List each component in a separate column*** *Use the two far right columns for non-rectangular shapes*					*Non-Rectangular*	*Non-Rectangular*
Facility Site Sketch ID							
Status: (check only one) *See animal holding area table for definitions*	☐Proposed ☐Existing ☐Eliminating	☐Proposed ☐Existing ☐Eliminating	☐Proposed ☐Existing ☐Eliminating	☐Proposed ☐Existing ☐Eliminating	☐Proposed ☐Existing ☐Eliminating	☐Proposed ☐Existing ☐Eliminating	☐Proposed ☐Existing ☐Eliminating

Type of Component	***List approximate component dimensions in feet*** *(If non-rectangular, use one of the two far right columns and list surface area)* *Length X Width*	*Length X Width*	*Length X Width*	*Length X Width*	*Length X Width*	*Non-Rectangular*	*Non-Rectangular*
Permanent Stockpile	X	X	X	X	X	sq. ft	sq. ft
Feed Storage Area	X	X	X	X	X	sq. ft	sq. ft
Mortality Compost Area	X	X	X	X	X	sq. ft	sq. ft
Infiltration Area (VTA)	X	X	X	X	X	sq. ft	sq. ft
Filter-Buffer Strip	X	X	X	X	X	sq. ft	sq. ft

XI. Construction stormwater (CSW) requirements (complete only if construction is proposed)

When construction activities are proposed, indicate the expected acreage of soil disturbance: _____ acres

Construction at the facility disturbs one acre or more but less than 5 acres must comply with the requirements of the CSW NPDES general permit, unless a separate application is made for a CSW permit.

Prior to construction at the facility that disturbs 5 or more acres an application for a CSW permit is required.

XII. Notifications and public meetings

The notifications and public meetings below are required to be done **before** permit issuance.

A. Notification to local zoning officials

When required. This notification is required in ***either*** of the following situations:

- ***Construction of a new*** feedlot, or manure storage area (i.e. new site) of any AU capacity.
- ***Expansion of an existing*** feedlot, or manure storage area of any AU capacity.

Notification methods. The applicant must provide notification of the construction or expansion to all local zoning authorities, including county, town, and city zoning authorities, at least 30 days prior to commencement of the construction or expansion. This notification *must* include, at a minimum, the information provided in Minn. R. 7020.2000, subp.4.,A (1) (a) (i to v).

An example notification can be found in the factsheet *Public Notification Requirements – Feedlots* available on the MPCA website at https://www.pca.state.mn.us/feedlots.

B. Notice to residents and property owners within 5,000 feet of a proposed project

When required. This notice is required in ***either*** of the following situations:

- ***Construction of a new*** feedlot, or manure storage area, which will have a capacity of 500 AU or more (i.e. new site).
- ***Expansion of an existing*** feedlot, or manure storage area, which currently has, or will have upon completion of the expansion, a capacity of 500 AU or more.

Notice methods. The owner shall not less than 20 business days before the anticipated issuance date of the permit, provide notice to each resident and each owner of real property within 5,000 feet of the perimeter of the proposed facility. This notice *must* include, at a minimum, the information provided in Minn. R. 7020.2000, subp.4.

An example notice can be found in the factsheet *Public Notification Requirements – Feedlots* available on the MPCA website at https://www.pca.state.mn.us/feedlots.

Verification of notice.

The CFO must verify that this notice has been completed prior to permit issuance.
Please include with this permit application one of the following options that provides verification that the required notice has been completed:

- An affidavit of publication from a newspaper of general circulation used to provide this notification.
- A list of all parties, with their location, that were notified by certified mail and copies of all signed mail return receipts.
- A list of all parties, with their location, that were personally visited with a date and signature from each party and certification signed by a notary public indicating in detail what was discussed.

RECEIVED
JUL 14 2023
NICOLLET COUNTY
PROPERTY SERVICES

XIII. Certifications and signature

Notification to local officials

The Applicant certifies that, if the application includes construction of a new facility or expansion of an existing facility, all local zoning authorities have been notified in accordance with Minn. R. 7020.2000 subp. 5.

Construction Stormwater (CSW) Requirements

The Applicant certifies that, if construction will disturb 5 or more acres, they have made a separate application for a CSW permit. For construction activities that disturb at least 1 acre but less than 5 acres, the Applicant certifies to comply with the requirements of the current CSW NPDES general permit (Minn. R. 7090.2020 provides permit coverage without the need for an application).

Application processing by the MPCA

If the MPCA or CFO determines that the CFO is unable to issue the CSF or interim permit as specified by Minn. R. 7020.1600 subp. 4a, the Applicant agrees to submit a new application using the MPCA online feedlot permit application service.

Applicant Signature

I hereby certify that the design, construction, and operation of the facility will be in accordance with this application and plans, specifications, reports, and related communications approved by the CFO, and in accordance with applicable permit conditions or regulations/standards of the MPCA. I also certify under penalty of law that this document and all attachments were prepared under my direction or supervision and the information submitted is, to the best of my knowledge and belief, true, accurate, and complete. I am aware that there are significant penalties for submitting false information, including the possibility of fine and imprisonment for knowing violations.

The person that signs this application must be one of the following:

A. For a corporation, a principal executive officer of at least the level of vice president
B. For a partnership, a general partner
C. For a sole proprietorship, the proprietor

***By typing/signing my name below**, I certify the above statements to be true and correct, to the best of my knowledge, and that this information can be used for the purpose of processing this form.*

Signature: Chuck Peters
(This document has been electronically signed.)

Title: Owner

Date (mm/dd/yyyy): 3/24/2023

Office phone: 507-931-1828

Cell phone: 507-327-4052

To sign up for electronic communications including the MPCA feedlot newsletters, please go to the MPCA website at https://public.govdelivery.com/accounts/MNPCA/subscriber/new.

RECEIVED
JUL 14 2023
NICOLLET COUNTY
PROPERTY SERVICES

Required enclosures

Permit applications submitted without all required enclosures are incomplete.

All forms are available on the *CSF & Interim permits* page of the MPCA feedlot program website at: https://www.pca.state.mn.us/feedlots

☐ A. A site sketch/aerial photograph indicating the location of the existing and proposed facility components.

☐ B. A Manure/Nutrient Management Plan (MMP) – The following are optional forms to assist with MMP development:

When **all** manure is transferred to another entity for utilization, complete a MMP using the form:

MMP requirements when ownership of manure is transferred.

When **all** manure is applied to land owned, rented, or leased by the applicant(s), or applied to other land where nutrient application decisions are made by the applicant(s), complete a MMP using the spreadsheet form:

MPCA Manure Management Planner.

When **some** (not all) manure is transferred to another entity for utilization, complete a MMP using both forms:

MMP requirements when ownership of manure is transferred and

MPCA Manure Management Planner.

☐ C. Plans and Specifications for construction, modification, or expansion of any of the following:

- Liquid manure storage area
- Vegetative infiltration area (VTA or VIB)
- Permanent manure stockpile
- Filter-Buffer strip

☐ D. Verification of the notifications required in part XII of this application.

APRIL 21, 2023

Nick Peters
41129 State Highway 99
St. Peter, MN 56082
Petersfamilyfarm1@gmail.com

ISG

RE: Soil Borings for Chuck Peters Finisher – ISG Project No. 23-28888

Dear Mr. Peters:

On April 10, 2023, ISG was present during excavation of 2 observation pits and recorded the soil profiles. A backhoe was used to excavate the 2 test holes. After recording the soil profiles, the holes were backfilled and compacted by placing the soil in the holes to provide the original soil profile.

The seasonal highwater table was at 33". The water table will be controlled by using a 4" perforated drain tile installed to gravity-drain to an existing farm tile of sufficient depth. This tile will prevent any ground water intrusion and damage to the concrete pit walls.

We have reviewed the concrete pit design along with the soils report and find the soils to be acceptable for this project.

If you have any questions, please call.

Sincerely,

Jason E. Hoehn, PE
Principal and Practice Group Leader
Jason.Hoehn@ISGInc.com

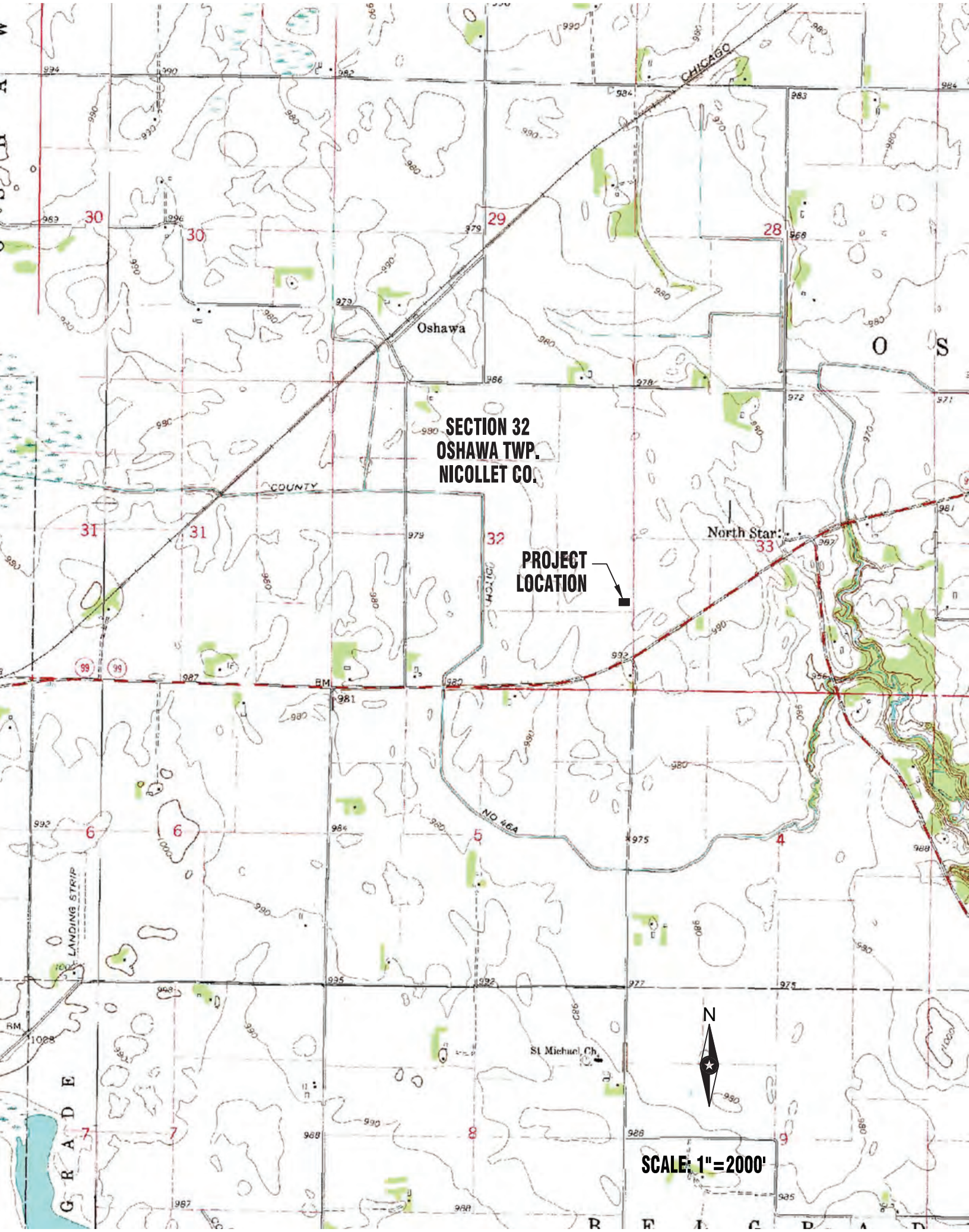
SECTION 32
OSHAWA TWP.
NICOLLET CO.
PROJECT
LOCATION
Oshawa
North Star
CHICAGO
COUNTY
DITCH
NO 46A
LANDING STRIP
St Michael Ch
N
SCALE: 1"=2000'

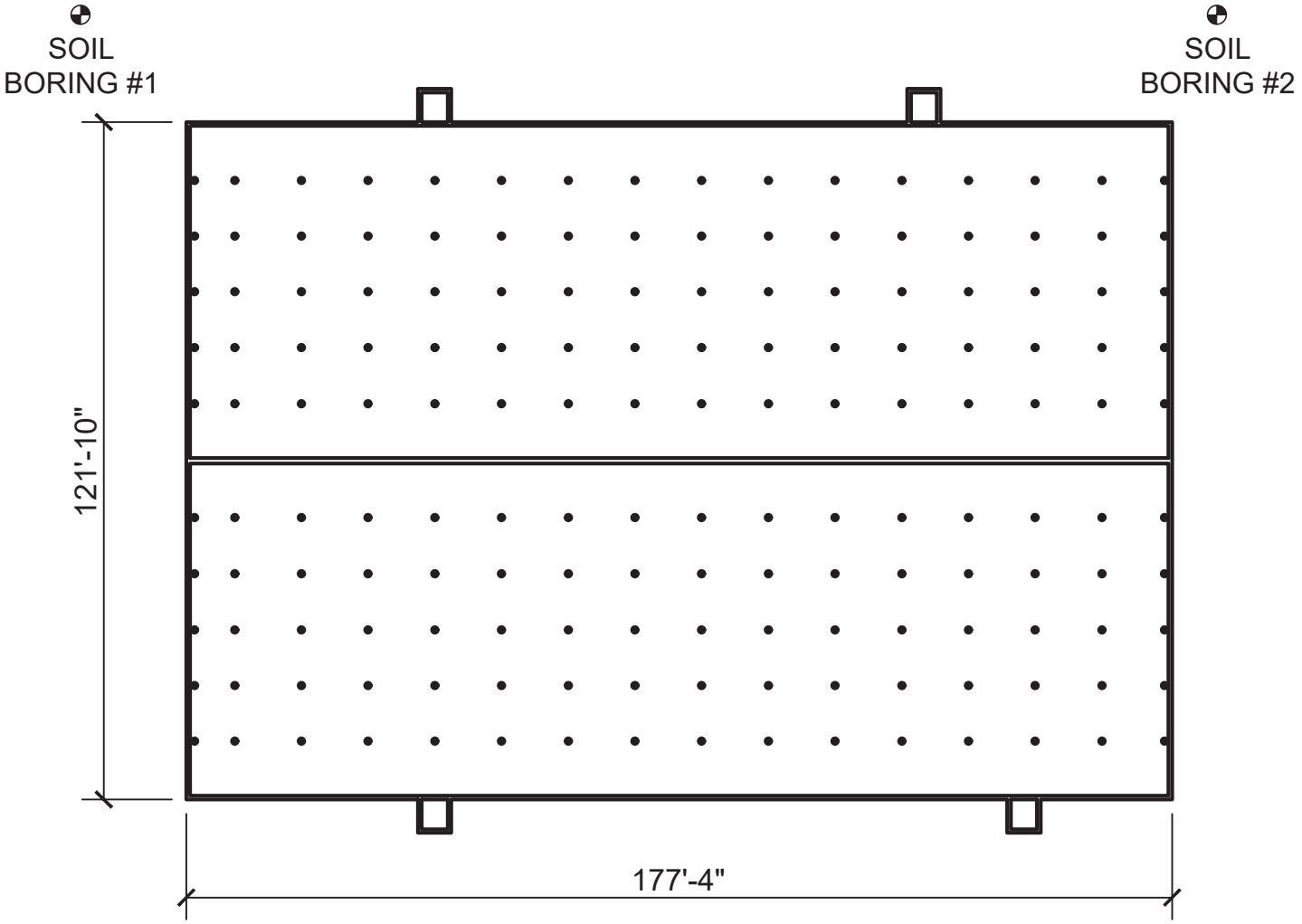

SOIL PROFILE LOCATIONS

CHUCK PETERS FINISHER
SECTION 32 OSHAWA TWP., NICOLLET COUNTY
PROJECT NO. 23-28888

SOIL BORING REPORT

Test No: 1

Project Name: Chuck Peters Finisher
ISG Project Number: 23-28888
Location: SE 1/4 Section 32
Township: Oshawa, T110N, R27W
County: Nicollet
Description: 122'x177' Finisher

Date: 4/10/2023
Temp: 60 Deg.
Conditions: Clear
Inspector: Matt Hudson

Assum. Elev.	Depth	USCS Symbol	Description of Materials		WL	SH	Notes
987.00'	+36'						Proposed Slat Elevation
984.00'	0"						Existing Grade
		10yr 2/1	Top Soil				
981.75'	-27"						
		10yr 5/2	Clay Loam				
980.75'	-39"						Seasonal High Water Table
979.00'	-60"						Proposed Pit Floor Elevation
							No Water at Time of Testing
		10yr 6/1	Clay Loam				
		10yr 5/8	w/ mottling				
973.67'	-124"						End of Soil Boring

Nearest Body of Water:	Location:	Type:	Distance:	Approx. Elev.:
	West	County Ditch No. 46A	2250'	972.00'

SOIL BORING REPORT

Test No: 2

Project Name: Chuck Peters Finisher
ISG Project Number: 23-28888
Location: SE 1/4 Section 32
Township: Oshawa, T110N, R27W
County: Nicollet
Description: 122'x177' Finisher

Date: 4/10/2023
Temp: 60 Deg.
Conditions: Clear
Inspector: Matt Hudson

Assum. Elev.	Depth	USCS Symbol	Description of Materials	WL	SH	Notes
987.00'	+36'					Proposed Slat Elevation
984.00'	0"					Existing Grade
		10yr 2/1	Top Soil			
981.25'	-33"					Seasonal High Water Table
		10yr 5/2	Clay Loam			
979.50'	-54"					
979.00'	-60"					Proposed Pit Floor Elevation
977.00'	-84"					Water at Time of Testing
		10yr 6/1	Clay Loam			
		10yr 5/8	w/ mottling			
973.17'	-130"					End of Soil Boring

Nearest Body of Water:	Location:	Type:	Distance:	Approx. Elev.:
	West	County Ditch No. 46A	2250'	972.00'

Form 1721 (6-25-2013)

MINNESOTA DEPARTMENT OF TRANSPORTATION
APPLICATION FOR ACCESS (DRIVEWAY) PERMIT

Document Management System # _____

District _____ Permit # _____

C.S. _____ T.H. _____

R.P. _____

(THIS SECTION FOR MnDOT OFFICE USE ONLY.)

ATTACH A SKETCH OF THE PROPOSED WORK AREA AND RELATION TO TRUNK HIGHWAY.
SUBMIT TO DISTRICT OFFICE OF MINNESOTA DEPARTMENT OF TRANSPORTATION.

APPLICANT	TELEPHONE	ADDRESS (Street, City, State, Zip)
Nick Peters	507-381-5256	41129 State Hwy 99 St. Peter, MN 56082
PROPERTY OWNER	**TELEPHONE**	**ADDRESS (Street, City, State, Zip)**
Peters Family LLLP	507-381-5256	41129 State Hwy 99 St. Peter, MN 56082

LOCATION OF PROPOSED WORK (City/Township) (County) (Distance) (N-S-E-W) **SPECIFIC ROAD INTERSECTION OR LANDMARK**

Highway 99 in Oshwaw TWP **Nicollet** Miles of 41129 State Hwy 99 St. Peter, MN 56082 North of Peters Family Farm.

WILL THIS ACCESS BE WITHIN TRIBAL LANDS? ☐ Yes ■ No **IF YES, WHICH ONE?**

PURPOSE OF DRIVEWAY	REQUESTED ENTRANCE WIDTH	PROPERTY IS IN	ZONING FOR PROPERTY IS
☐ Temporary ☐ Field Entrance ☐ Residential ☐ Proposed Public Street ■ Commercial (Specify Type) Hog barn	Feet	■ Platted Area ☐ Unplatted Area	Agriculture

IS BUILDING TO BE CONSTRUCTED	WILL BUILDING BE	NUMBER OF PRESENT DRIVEWAYS TO PROPERTY
☐ No ■ Yes (Specify Type)	☐ Temporary ■ Permanent	1

EXACT LOCATION OF PRESENT DRIVEWAY(S)	EXACT LOCATION OF PROPOSED DRIVEWAY(S)
North of mail box of Peters Family Farm	250 feet East of current driveway

LEGAL DESCRIPTION OF PROPERTY
SE 1/4 of Section 32 Oshawa Twp

WORK TO START ON OR AFTER	WORK TO BE COMPLETED BY
June, 1 2023	November 1, 2023

APPLICANT'S ACCEPTANCE, WAIVER AND INDEMNIFICATION

The undersigned applicant hereby agrees to comply with applicable statutes, rules, and all the standard conditions and special provisions of this permit. The applicant understands and agrees that no work in connection with this application will be started until the application has been approved and the permit issued.

The applicant also understands that this permit may also be subject to the approval of local road authorities having joint supervision over said street or highway, and may be subject to applicant's compliance with the rules and regulations of the Minnesota Environmental Quality Board and/or any other affected governmental agencies.

The applicant is aware of circumstances or hazards that may arise while performing the work associated with this application that could result in injury, loss, damage or death, and the applicant assumes the risk of such circumstances, dangers or hazards, whether reasonably foreseeable or not.

The undersigned applicant expressly agrees that except for negligent acts of the State, its agents and employees, the applicant or his/her agents or contractor shall assume all liability for, and save the State, its agents and employees, harmless from any and all claims for damages, actions or causes of action arising out of the work to be done in connection with this application and permit.

NAME AND TITLE	EMAIL ADDRESS
Nick Peters - owner	petersfamilyfarm1@gmail.com
DATE 4/26/23	SIGNATURE Nick Peters

DO NOT WRITE BELOW THIS LINE

PERMIT NOT VALID UNLESS BEARING SIGNATURE AND NUMBER

AUTHORIZATION OF PERMIT

In consideration of the applicant's agreement to comply in all respects with the applicable laws and the conditions of the Commissioner of Transportation pertaining to this permit, permission is hereby granted for the work to be performed as described in the above application, said work to be performed in accordance with the following standard conditions and special provisions:

SEE ATTACHED STANDARD CONDITIONS AND SPECIAL PROVISIONS

Date All Work To Be Completed By	Authorized MnDOT Signature	Date of Authorized Signature

DISTRIBUTION	DEPOSIT REQUIREMENTS	DEPOSIT TYPE
Original to Area Maintenance Engineer	☐ No Deposit Required	Cashier's Check # _____
Applicant	☐ Deposit Required in the Amount of $ _____	Certified Check # _____
Subarea Supervisor	Date Deposit Received _____	Money Order # _____
Roadway Regulations Supervisor	***Deposit to be returned upon satisfactory completion of all work***	Bond # _____

DATE WORK COMPLETED ***(The date when the work is completed must be reported to the MnDOT District Permits Office)***

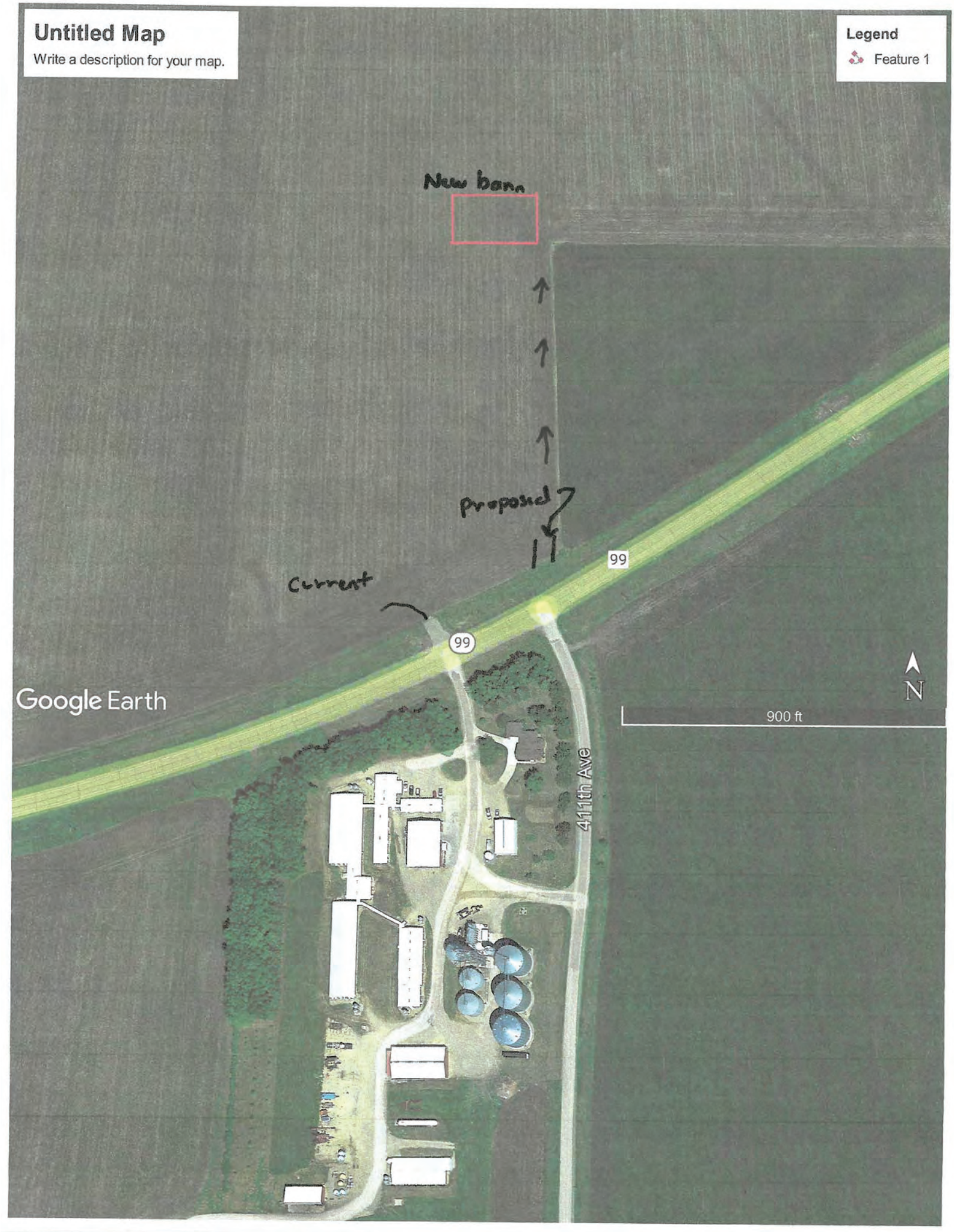
Untitled Map
Write a description for your map.
Legend
Feature 1
New barn
proposed
Current
99
99
411th Ave
900 ft
N
Google Earth

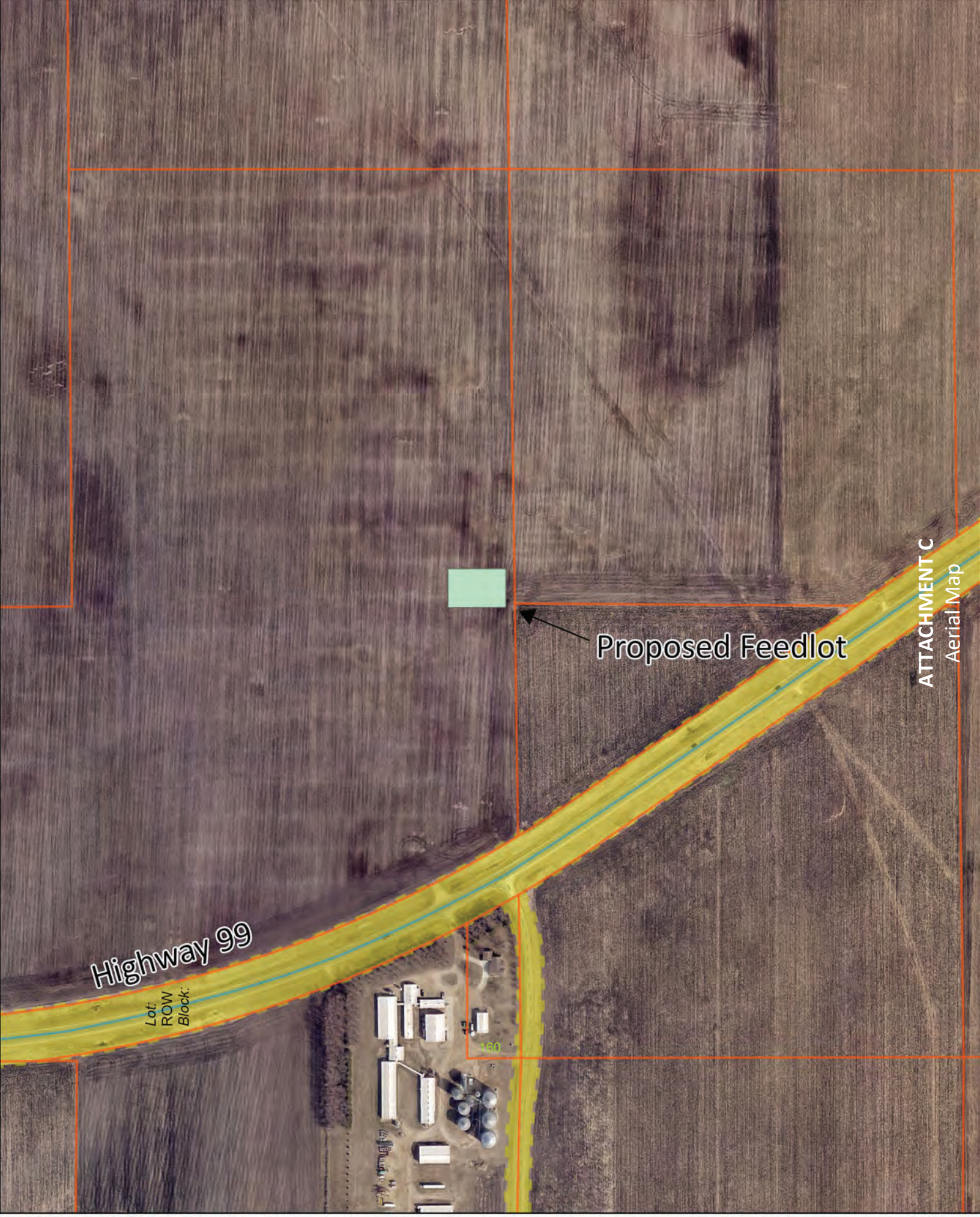

ATTACHMENT C
Aerial Map

NICOLLET COUNTY EST. 1853

Disclaimer: The information herein is intended to be a true representation of available records. However, there is no guarantee to the user as to the accuracy, suitability, or reliability of this data for any purpose. Nicollet County assumes no responsibility for actual or consequential damage incurred as a result of any user's reliance on this data. The user accepts the data "as is", and assumes all risks associated with its use. By acceptance of this data, the user agrees not to transmit this data or provide access to it or any part of it to another party.

0 150 300 600 Feet

N

Proposed Feedlot

NORTH STAR

Proposed Feedlot

ATTACHMENT D
Location Map

Highway 99

Lot ROW
Block

CO RD 13

NICOLLET COUNTY EST. 1853

Disclaimer: The information herein is intended to be a true representation of available records. However, there is no guarantee to the user as to the accuracy, suitability, or reliability of this data for any purpose. Nicollet County assumes no responsibility for actual or consequential damage incurred as a result of any user's reliance on this data. The user accepts the data "as is", and assumes all risks associated with its use. By acceptance of this data, the user agrees not to transmit this data or provide access to it or any part of it to another party.

0 500 1,000 2,000 Feet

N

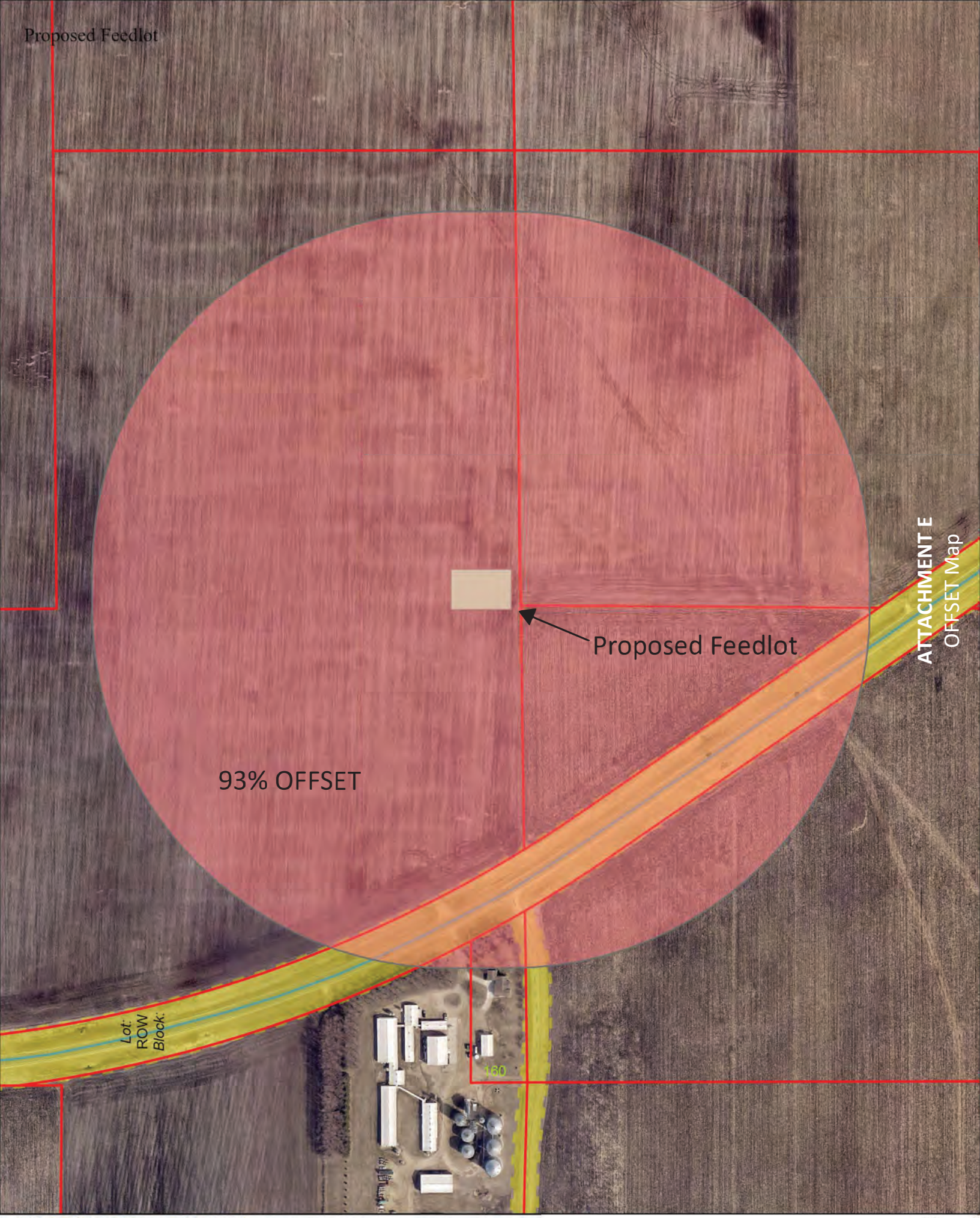

NICOLLET COUNTY EST. 1853

Disclaimer: The information herein is intended to be a true representation of available records. However, there is no guarantee to the user as to the accuracy, suitability, or reliability of this data for any purpose. Nicollet County assumes no responsibility for actual or consequential damage incurred as a result of any user's reliance on this data. The user accepts the data "as is", and assumes all risks associated with its use. By acceptance of this data, the user agrees not to transmit this data or provide access to it or any part of it to another party.

DISPLAYNAME	MAILINGADDR	MAILINGCITYSTATEZIP
Martens Family Trust	44007 478Th St	Nicollet, MN 56074
Beverlee Ann Alvina Olson Trust	Po Box 109	Lake George, MN 56458
Darlamae & Fred Lange	46815 411Th Ave	North Mankato, MN 56003
Peters Family LLLP	41129 State Highway 99	Saint Peter, MN 56082
Gary Wenner	44891 County Road 13	Saint Peter, MN 56082
Joanne Eversman	45278 County Road 13	Saint Peter, MN 56082
Peters Family Farm Inc	41129 Hwy 99	Saint Peter, MN 56082
Harold Stoffregen Trust	41423 State Hwighway 99	Saint Peter, MN 56082
Allen Stoffregen	Po Box 2051	Lewiston, ID 83501
Charles & Joann Peters	41129 State Highway 99	Saint Peter, MN 56082
Gerald Seitzer	41032 436Th St	Saint Peter, MN 56082
Cullen & Amanda Kennedy	45646 County Rd 13	Saint Peter, MN 56082
Tim Hulke	42022 State Highway 99	Saint Peter, MN 56082
Charles & Kelly Mans	41607 470Th St	North Mankato, MN 56003
Douglas Edwards	41654 State Highway 99	Saint Peter, MN 56082
Linda Pell - Oshawa Township	36601 450Th Ln	St Peter, MN 56082

ATTACHMENT F
Neighbor Notification List

Nicollet County Board of Commissioners
Board Meeting Agenda Item

Agenda Item:

Consideration of the AIA Document B132-2019 with Vetter Johnson Architects, Inc.

Primary Originating Division/Dept.: Administration

Meeting Date: 09/12/2023

Contact: Mandy Landkamer Title: County Administrator

Item Type: (Select One) Regular Agenda

Amount of Time Requested 5 minutes

Presenter: Mandy Landkamer Title: County Administrator

Attachments: ◉ Yes ○ No

County Strategy: (Select One) Facilities and Space - preserve, maintain and build our assets

BACKGROUND/JUSTIFICATION:

Consideration of the attached agreement between Nicollet County and Vetter Johnson Architects, Inc. for services related to the interior remodel of the Nicollet County Government Center (Property and Public Services Department) located at 501 S. Minnesota Avenue, St Peter, MN 56082.

Supporting Documents: ◉ Attached ○ In Signature Folder ○ None

Prior Board Action Taken on this Agenda Item: ○ Yes ◉ No

If "yes", when? (provide year; mm/dd/yy if known)

Approved by County Attorney's Office: ○ Yes ○ No ◉ N/A

ACTION REQUESTED:

Approval of the AIA Document B132-2019 between Nicollet County and Vetter Johnson Architects, Inc. and authorization for the County Administrator to execute the agreement.

FISCAL IMPACT: (Select One) Other

If "Other", specify

FUNDING

County Dollars = 0

Other (Select One)

Total

FTE IMPACT: (Select One) No FTE change

If "Increase or "Decrease" specify:

Related Financial/FTE Comments:

Remodel is proposed to be funded by the ARPA.

AIA® Document B132™ – 2019

Standard Form of Agreement Between Owner and Architect, Construction Manager as Adviser Edition

AGREEMENT made as of the Thirty-first day of August in the year Two Thousand Twenty-three
(In words, indicate day, month, and year.)

BETWEEN the Architect's client identified as the Owner:
(Name, legal status, address, and other information)

County of Nicollet
Nicollet County Government Center
501 S. Minnesota Ave.
St. Peter, Minnesota 56082

and the Architect:
(Name, legal status, address, and other information)

Vetter Johnson Architects, Inc.
1129 Pike Lake Dr.
St. Paul, Minnesota 55112

for the following Project:
(Name, location, and detailed description)

Nicollet County - PPSD Remodeling
St. Peter, MN
Interior remodeling of public services departments in the Nicollet County Government Center in St. Peter Minnesota

The Construction Manager:
(Name, legal status, address, and other information)

Contegrity Group, Inc.
101 First Street SE
Little Falls, Minnesota 56345

The Owner and Architect agree as follows.

ADDITIONS AND DELETIONS:
The author of this document has added information needed for its completion. The author may also have revised the text of the original AIA standard form. An *Additions and Deletions Report* that notes added information as well as revisions to the standard form text is available from the author and should be reviewed. A vertical line in the left margin of this document indicates where the author has added necessary information and where the author has added to or deleted from the original AIA text.

This document has important legal consequences. Consultation with an attorney is encouraged with respect to its completion or modification.

This document is intended to be used in conjunction with AIA Documents A132™–2019, Standard Form of Agreement Between Owner and Contractor, Construction Manager as Adviser Edition; A232™–2019, General Conditions of the Contract for Construction, Construction Manager as Adviser Edition; and C132™–2019, Standard Form of Agreement Between Owner and Construction Manager as Adviser. AIA Document A232™–2019 is adopted in this document by reference. Do not use with other general conditions unless this document is modified.

Init.
/

AIA Document B132 – 2019. Copyright © 1992, 2009, and 2019. All rights reserved. "The American Institute of Architects," "American Institute of Architects," "AIA," the AIA Logo, and "AIA Contract Documents" are registered trademarks of The American Institute of Architects. This document was produced at 09:34:08 ET on 09/06/2023 under Order No.2114465816 which expires on 08/29/2024, is not for resale, is licensed for one-time use only, and may only be used in accordance with the AIA Contract Documents® Terms of Service. To report copyright violations, e-mail docinfo@aiacontracts.com.
User Notes:

(862082885)

TABLE OF ARTICLES

1 INITIAL INFORMATION

2 ARCHITECT'S RESPONSIBILITIES

3 SCOPE OF ARCHITECT'S BASIC SERVICES

4 SUPPLEMENTAL AND ADDITIONAL SERVICES

5 OWNER'S RESPONSIBILITIES

6 COST OF THE WORK

7 COPYRIGHTS AND LICENSES

8 CLAIMS AND DISPUTES

9 TERMINATION OR SUSPENSION

10 MISCELLANEOUS PROVISIONS

11 COMPENSATION

12 SPECIAL TERMS AND CONDITIONS

13 SCOPE OF THE AGREEMENT

ARTICLE 1 INITIAL INFORMATION

§ 1.1 This Agreement is based on the Initial Information set forth in this Section 1.1.
(For each item in this section, insert the information or a statement such as "not applicable," or "unknown at time of execution".)

§ 1.1.1 The Owner's program for the Project:
(Insert the Owner's program, identify documentation that establishes the Owner's program, or state the manner in which the program will be developed.)

Not applicable

§ 1.1.2 The Project's physical characteristics:
(Identify or describe pertinent information about the Project's physical characteristics, such as size; location; dimensions; geotechnical reports; site boundaries; topographic surveys; traffic and utility studies; availability of public and private utilities and services; legal description of the site; etc.)

Interior remodeling of the Nicollet County Government Center in St. Peter, Minnesota to include a revised floorplan layout to accommodate anticipated needs for public service and staff collaboration. Work to include new service counters, replacement of flooring, ceilings, lighting, wall finishes, doors, mechanical, electrical, security and technology improvements.

§ 1.1.3 The Owner's budget for the Cost of the Work, as defined in Section 6.1:
(Provide total and, if known, a line item breakdown.)

Not applicable

§ 1.1.4 The Owner's anticipated design and construction milestone dates:

.1 Design phase milestone dates, if any:

Init.

/

AIA Document B132 – 2019. Copyright © 1992, 2009, and 2019. All rights reserved. "The American Institute of Architects," "American Institute of Architects," "AIA," the AIA Logo, and "AIA Contract Documents" are registered trademarks of The American Institute of Architects. This document was produced at 09:34:08 ET on 09/06/2023 under Order No.2114465816 which expires on 08/29/2024, is not for resale, is licensed for one-time use only, and may only be used in accordance with the AIA Contract Documents® Terms of Service. To report copyright violations, e-mail docinfo@aiacontracts.com.
User Notes: (862082885)

Not applicable

.2 Construction commencement date:

Winter 2024

.3 Substantial Completion date or dates:

Summer 2024

.4 Other milestone dates:

Not applicable

§ 1.1.5 The Owner intends the following procurement method for the Project:
(Identify method such as competitive bid or negotiated contract.)

Competitive bid

§ 1.1.6 The Owner's requirements for accelerated or fast-track design and construction, multiple bid packages, or phased construction are set forth below:
(Identify any requirements for fast-track scheduling or phased construction and, if applicable, list number and type of bid/procurement packages.)

Not applicable

§ 1.1.7 The Owner's anticipated Sustainable Objective for the Project:
(Identify and describe the Owner's Sustainable Objective for the Project, if any.)

Not applicable

§ 1.1.7.1 If the Owner identifies a Sustainable Objective, the Owner and Architect shall complete and incorporate AIA Document E235-2019, Sustainable Projects Exhibit, Construction Manager as Adviser Edition, into this Agreement to define the terms, conditions and services related to the Owner's Sustainable Objective. If E235-2019 is incorporated into this Agreement, the Owner and Architect shall incorporate the completed E235-2019 into the agreements with the consultants and contractors performing services or Work in any way associated with the Sustainable Objective.

§ 1.1.8 The Owner identifies the following representative in accordance with Section 5.4:
(List name, address, and other contact information.)

Ms. Mandy Landkamer
Nicollet County Administrator
Nicollet County Government Center
501 S. Minnesota Ave.
St. Peter, Minnesota 56082

§ 1.1.9 The persons or entities, in addition to the Owner's representative, who are required to review the Architect's submittals to the Owner are as follows:
(List name, address, and other contact information.)

To be determined

§ 1.1.10 The Owner shall retain the following consultants and Contractors:
(List name, legal status, address, and other contact information.)

.1 Construction Manager:

AIA Document B132 – 2019. Copyright © 1992, 2009, and 2019. All rights reserved. "The American Institute of Architects," "American Institute of Architects," "AIA," the AIA Logo, and "AIA Contract Documents" are registered trademarks of The American Institute of Architects. This document was produced at 09:34:08 ET on 09/06/2023 under Order No.2114465816 which expires on 08/29/2024, is not for resale, is licensed for one-time use only, and may only be used in accordance with the AIA Contract Documents® Terms of Service. To report copyright violations, e-mail docinfo@aiacontracts.com.
User Notes:

(862082885)

(The Construction Manager is identified on the cover page. If a Construction Manager has not been retained as of the date of this Agreement, state the anticipated date of retention. If the Architect is to assist the Owner in selecting the Construction Manager, complete Section 4.1.1.1.)

Contegrity Group, Inc.
101 First Street SE
Little Falls, Minnesota 56345

.2 Land Surveyor:

Not applicable

.3 Geotechnical Engineer:

Not applicable

.4 Civil Engineer:

Not applicable

.5 Other consultants and Contractors:
(List any other consultants and Contractors retained by the Owner.)

To be determined, if required.

§ 1.1.11 The Architect identifies the following representative in accordance with Section 2.4:
(List name, address, and other contact information.)

Tyler L. Johnson
1129 Pike Lake Dr.
St. Paul, Minnesota 55112

§ 1.1.12 The Architect shall retain the consultants identified in Sections 1.1.12.1 and 1.1.12.2:
(List name, legal status, address, and other contact information.)

§ 1.1.12.1 Consultants retained under Basic Services:

.1 Structural Engineer:

Not included under Basic Services.
Note: Structural engineering services are not yet known to be required with project scope. If determined to be required for this remodeling project, structural engineering services will be supplemental services with associated costs being paid for by the owner as stated in 1.1.12.2.

AIA Document B132 – 2019. Copyright © 1992, 2009, and 2019. All rights reserved. "The American Institute of Architects," "American Institute of Architects," "AIA," the AIA Logo, and "AIA Contract Documents" are registered trademarks of The American Institute of Architects. This document was produced at 09:34:08 ET on 09/06/2023 under Order No.2114465816 which expires on 08/29/2024, is not for resale, is licensed for one-time use only, and may only be used in accordance with the AIA Contract Documents® Terms of Service. To report copyright violations, e-mail docinfo@aiacontracts.com.
User Notes: (862082885)

.2 Mechanical Engineer:

EDI-Dolejs, Inc.
1112 N 5th Street
Minneapolis, MN 55411

.3 Electrical Engineer:

EDI-Dolejs, Inc.
1112 N 5th Street
Minneapolis, MN 55411

§ 1.1.12.2 Consultants retained under Supplemental Services:

Structural Engineer: It is not yet known if Structural Engineering will be required for this interior remodeling project, however, if determined so, such consultant services would be retained under Supplemental Services and associated costs will be paid for by the owner.

§ 1.1.13 Other Initial Information on which the Agreement is based:

Not applicable

§ 1.2 The Owner and Architect may rely on the Initial Information. Both parties, however, recognize that the Initial Information may materially change and, in that event, the Owner and the Architect shall appropriately adjust the Architect's services, schedule for the Architect's services, and the Architect's compensation. The Owner shall adjust the Owner's budget for the Cost of the Work and the Owner's anticipated design and construction milestones, as necessary, to accommodate material changes in the Initial Information.

§ 1.3 The parties shall agree upon protocols governing the transmission and use of Instruments of Service or any other information or documentation in digital form. The parties will use AIA Document E203-2013, Building Information Modeling and Digital Data Exhibit, to establish the protocols for the development, use, transmission, and exchange of digital data.

§ 1.3.1 Any use of, or reliance on, all or a portion of a building information model without agreement to protocols governing the use of, and reliance on, the information contained in the model and without having those protocols set forth in AIA Document E203-2013, Building Information Modeling and Digital Data Exhibit, and the requisite AIA Document G202-2013, Project Building Information Modeling Protocol Form, shall be at the using or relying party's sole risk and without liability to the other party and its contractors or consultants, the authors of, or contributors to, the building information model, and each of their agents and employees.

§ 1.4 The term "Contractors" refers to persons or entities who perform Work under contracts with the Owner that are administered by the Architect and Construction Manager. The term "Contractors" is used to refer to such persons or entities, whether singular or plural. The term does not include the Owner's own forces, or Separate Contractors, which are persons or entities who perform construction under separate contracts with the Owner not administered by the Architect and Construction Manager.

AIA Document B132 – 2019. Copyright © 1992, 2009, and 2019. All rights reserved. "The American Institute of Architects," "American Institute of Architects," "AIA," the AIA Logo, and "AIA Contract Documents" are registered trademarks of The American Institute of Architects. This document was produced at 09:34:08 ET on 09/06/2023 under Order No.2114465816 which expires on 08/29/2024, is not for resale, is licensed for one-time use only, and may only be used in accordance with the AIA Contract Documents® Terms of Service. To report copyright violations, e-mail docinfo@aiacontracts.com.
User Notes: (862082885)

ARTICLE 2 ARCHITECT'S RESPONSIBILITIES

§ 2.1 The Architect shall provide professional services as set forth in this Agreement. The Architect represents that it is properly licensed in the jurisdiction where the Project is located to provide the services required by this Agreement, or shall cause such services to be performed by appropriately licensed design professionals.

§ 2.2 The Architect shall perform its services consistent with the professional skill and care ordinarily provided by architects practicing in the same or similar locality under the same or similar circumstances. The Architect shall perform its services as expeditiously as is consistent with such professional skill and care and the orderly progress of the Project.

§ 2.3 The Architect shall provide its services in conjunction with the services of a Construction Manager as described in AIA Document C132™–2019, Standard Form of Agreement Between Owner and Construction Manager as Adviser. The Architect shall not be responsible for actions taken by the Construction Manager.

§ 2.4 The Architect shall identify a representative authorized to act on behalf of the Architect with respect to the Project.

§ 2.5 Except with the Owner's knowledge and consent, the Architect shall not engage in any activity, or accept any employment, interest or contribution that would reasonably appear to compromise the Architect's professional judgment with respect to this Project.

§ 2.6 The Architect shall maintain the following insurance until termination of this Agreement. If any of the requirements set forth below are in addition to the types and limits the Architect normally maintains, the Owner shall pay the Architect as set forth in Section 11.9.

§ 2.6.1 Commercial General Liability with policy limits of not less than two million dollars ($ 2,000,000.00) for each occurrence and four million dollars ($ 4,000,000.00) aggregate.

§ 2.6.2 Automobile Liability covering owned and rented vehicles operated by the Architect with policy limits of not less than two million dollars ($ 2,000,000.00) combined single limit and aggregate for bodily injury and property damage.

§ 2.6.3 The Architect may achieve the required limits and coverage for Commercial General Liability and Automobile Liability through a combination of primary and excess or umbrella liability insurance, provided such primary and excess or umbrella liability insurance policies result in the same or greater coverage as the coverages required under Sections 2.6.1 and 2.6.2, and in no event shall any excess or umbrella liability insurance provide narrower coverage than the primary policy. The excess policy shall not require the exhaustion of the underlying limits only through the actual payment by the underlying insurers.

§ 2.6.4 Workers' Compensation at statutory limits.

§ 2.6.5 Employers' Liability with policy limits not less than five hundred thousand ($ 500,000.00) each accident, five hundred thousand ($ 500,000.00) each employee, and five hundred thousand ($ 500,000.00) policy limit.

§ 2.6.6 Professional Liability covering negligent acts, errors and omissions in the performance of professional services with policy limits of not less than two million dollars ($ 2,000,000.00) per claim and two million dollars ($ 2,000,000.00) in the aggregate.

§ 2.6.7 Additional Insured Obligations. To the fullest extent permitted by law, the Architect shall cause the primary and excess or umbrella policies for Commercial General Liability and Automobile Liability to include the Owner as an additional insured for claims caused in whole or in part by the Architect's negligent acts or omissions. The additional insured coverage shall be primary and non-contributory to any of the Owner's insurance policies and shall apply to both ongoing and completed operations.

§ 2.6.8 The Architect shall provide certificates of insurance to the Owner that evidence compliance with the requirements in this Section 2.6.

AIA Document B132 – 2019. Copyright © 1992, 2009, and 2019. All rights reserved. "The American Institute of Architects," "American Institute of Architects," "AIA," the AIA Logo, and "AIA Contract Documents" are registered trademarks of The American Institute of Architects. This document was produced at 09:34:08 ET on 09/06/2023 under Order No.2114465816 which expires on 08/29/2024, is not for resale, is licensed for one-time use only, and may only be used in accordance with the AIA Contract Documents® Terms of Service. To report copyright violations, e-mail docinfo@aiacontracts.com.
User Notes:

(862082885)

ARTICLE 3 SCOPE OF ARCHITECT'S BASIC SERVICES

§ 3.1 The Architect's Basic Services consist of those described in this Article 3 and include usual and customary structural, mechanical, and electrical engineering services. Services not set forth in this Article 3 are Supplemental or Additional Services.

§ 3.1.1 The Architect shall manage the Architect's services, research applicable design criteria, attend Project meetings, communicate with members of the Project team, and report progress to the Owner.

§ 3.1.2 The Architect shall coordinate its services with those services provided by the Owner, the Construction Manager, and the Owner's other consultants. The Architect shall be entitled to rely on, and shall not be responsible for, the accuracy, completeness, and timeliness of, services and information furnished by the Owner, the Construction Manager, and the Owner's other consultants. The Architect shall provide prompt written notice to the Owner if the Architect becomes aware of any error, omission or inconsistency, in such services or information.

§ 3.1.3 As soon as practicable after the date of this Agreement, the Architect shall submit, for the Construction Manager's review and the Owner's approval, a schedule for the performance of the Architect's services. The schedule shall include design phase milestone dates, as well as the anticipated dates for the commencement of construction and for Substantial Completion of the Work as set forth in the Initial Information. This schedule shall include allowances for periods of time required for the Owner's review, for the Construction Manager's review, for the performance of the Owner's consultants, and for approval of submissions by authorities having jurisdiction over the Project. Once approved by the Owner, time limits established by the schedule shall not, except for reasonable cause, be exceeded by the Architect or Owner. With the Owner's approval, the Architect shall adjust the schedule, if necessary, as the Project proceeds until the commencement of construction.

§ 3.1.4 The Architect shall submit information to the Construction Manager and participate in developing and revising the Project schedule as it relates to the Architect's services. The Architect shall review and approve, or take other appropriate action upon, the portion of the Project schedule relating to the performance of the Architect's services.

§ 3.1.5 The Architect shall not be responsible for an Owner's or Construction Manager's directive or substitution, or for the Owner's acceptance of non-conforming Work, made or given without the Architect's written approval.

§ 3.1.6 The Architect shall, in coordination with the Construction Manager, contact governmental authorities required to approve the Construction Documents and entities providing utility services to the Project. The Architect shall respond to applicable design requirements imposed by those authorities and entities.

§ 3.1.7 The Architect shall assist the Owner and Construction Manager in connection with the Owner's responsibility for filing documents required for the approval of governmental authorities having jurisdiction over the Project.

§ 3.2 Schematic Design Phase Services

§ 3.2.1 The Architect shall review the program and other information furnished by the Owner and Construction Manager, and shall review laws, codes, and regulations applicable to the Architect's services.

§ 3.2.2 The Architect shall prepare a preliminary evaluation of the Owner's program, schedule, budget for the Cost of the Work, Project site, and the proposed procurement and delivery method, and other Initial Information, each in terms of the other, to ascertain the requirements of the Project. The Architect shall notify the Owner of (1) any inconsistencies discovered in the information, and (2) other information or consulting services that may be reasonably needed for the Project.

§ 3.2.3 The Architect shall present its preliminary evaluation to the Owner and Construction Manager and shall discuss with the Owner and Construction Manager alternative approaches to design and construction of the Project. The Architect shall reach an understanding with the Owner and Construction Manager regarding the requirements of the Project.

§ 3.2.4 Based on the Project requirements agreed upon with the Owner, the Architect shall prepare and present, to the Owner and Construction Manager, for the Owner's approval, a preliminary design illustrating the scale and relationship of the Project components.

AIA Document B132 – 2019. Copyright © 1992, 2009, and 2019. All rights reserved. "The American Institute of Architects," "American Institute of Architects," "AIA," the AIA Logo, and "AIA Contract Documents" are registered trademarks of The American Institute of Architects. This document was produced at 09:34:08 ET on 09/06/2023 under Order No.2114465816 which expires on 08/29/2024, is not for resale, is licensed for one-time use only, and may only be used in accordance with the AIA Contract Documents® Terms of Service. To report copyright violations, e-mail docinfo@aiacontracts.com.
User Notes: (862082885)

§ 3.2.5 Based on the Owner's approval of the preliminary design, the Architect shall prepare Schematic Design Documents for the Construction Manager's review and Owner's approval. The Schematic Design Documents shall consist of drawings and other documents including a site plan, if appropriate, and preliminary building plans, sections and elevations; and may include some combination of study models, perspective sketches, or digital representations. Preliminary selections of major building systems and construction materials shall be noted on the drawings or described in writing.

§ 3.2.5.1 The Architect shall consider sustainable design alternatives, such as material choices and building orientation, together with other considerations based on program and aesthetics, in developing a design that is consistent with the Owner's program, schedule and budget for the Cost of the Work. The Owner may obtain more advanced sustainable design services as a Supplemental Service under Section 4.1.1.

§ 3.2.5.2 The Architect shall consider with the Owner and the Construction Manager the value of alternative materials, building systems and equipment, together with other considerations based on program and aesthetics, in developing a design for the Project that is consistent with the Owner's program, schedule, and budget for the Cost of the Work.

§ 3.2.6 The Architect shall submit the Schematic Design Documents to the Owner and the Construction Manager. The Architect shall meet with the Construction Manager to review the Schematic Design Documents.

§ 3.2.7 Upon receipt of the Construction Manager's review comments and cost estimate at the conclusion of the Schematic Design Phase, the Architect shall take action as required under Section 6.4, and request the Owner's approval of the Schematic Design Documents. If revisions to the Schematic Design Documents are required to comply with the Owner's budget for the Cost of the Work at the conclusion of the Schematic Design Phase, the Architect shall incorporate such revisions in the Design Development Phase.

§ 3.2.8 In the further development of the Drawings and Specifications during this and subsequent phases of design, the Architect shall be entitled to rely on the accuracy of the estimates of the Cost of the Work, which are to be provided by the Construction Manager under the Construction Manager's agreement with the Owner.

§ 3.3 Design Development Phase Services

§ 3.3.1 Based on the Owner's approval of the Schematic Design Documents, and on the Owner's authorization of any adjustments in the Project requirements and the budget for the Cost of the Work, the Architect shall prepare Design Development Documents for the Construction Manager's review and the Owner's approval. The Design Development Documents shall be based upon information provided, and estimates prepared by, the Construction Manager and shall illustrate and describe the development of the approved Schematic Design Documents and shall consist of drawings and other documents including plans, sections, elevations, typical construction details, and diagrammatic layouts of building systems to fix and describe the size and character of the Project as to architectural, structural, mechanical and electrical systems, and other appropriate elements. The Design Development Documents shall also include outline specifications that identify major materials and systems and establish in general their quality levels.

§ 3.3.2 Prior to the conclusion of the Design Development Phase, the Architect shall submit the Design Development Documents to the Owner and the Construction Manager. The Architect shall meet with the Construction Manager to review the Design Development Documents.

§ 3.3.3 Upon receipt of the Construction Manager's information and estimate at the conclusion of the Design Development Phase, the Architect shall take action as required under Sections 6.5 and 6.6 and request the Owner's approval of the Design Development Documents.

§ 3.4 Construction Documents Phase Services

§ 3.4.1 Based on the Owner's approval of the Design Development Documents, and on the Owner's authorization of any adjustments in the Project requirements and the budget for the Cost of the Work, the Architect shall prepare Construction Documents for the Construction Manager's review and the Owner's approval. The Construction Documents shall illustrate and describe the further development of the approved Design Development Documents and shall consist of Drawings and Specifications setting forth in detail the quality levels and performance criteria of materials and systems and other requirements for the construction of the Work. The Owner and Architect acknowledge that, in order to perform the Work, the Contractor will provide additional information, including Shop

AIA Document B132 – 2019. Copyright © 1992, 2009, and 2019. All rights reserved. "The American Institute of Architects," "American Institute of Architects," "AIA," the AIA Logo, and "AIA Contract Documents" are registered trademarks of The American Institute of Architects. This document was produced at 09:34:08 ET on 09/06/2023 under Order No.2114465816 which expires on 08/29/2024, is not for resale, is licensed for one-time use only, and may only be used in accordance with the AIA Contract Documents® Terms of Service. To report copyright violations, e-mail docinfo@aiacontracts.com.
User Notes: (862082885)

Drawings, Product Data, Samples and other similar submittals, which the Architect shall review in accordance with Section 3.6.4.

§ 3.4.2 The Architect shall incorporate the design requirements of governmental authorities having jurisdiction over the Project into the Construction Documents.

§ 3.4.3 During the development of the Construction Documents, if requested by the Owner, the Architect shall assist the Owner and the Construction Manager in the development and preparation of (1) procurement information that describes the time, place, and conditions of bidding, including bidding or proposal forms; (2) the form of agreements between the Owner and Contractors; and (3) the Conditions of the Contracts for Construction (General, Supplementary and other Conditions); and (4) a project manual that includes the Conditions of the Contracts for Construction and Specifications, and may include bidding requirements and sample forms.

§ 3.4.4 Prior to the conclusion of the Construction Documents Phase, the Architect shall submit the Construction Documents to the Owner and the Construction Manager. The Architect shall meet with the Construction Manager to review the Construction Documents.

§ 3.4.5 Upon receipt of the Construction Manager's information and an estimate at the conclusion of the Construction Documents Phase, the Architect shall take action as required under Section 6.7, and request the Owner's approval of the Construction Documents.

§ 3.5 Procurement Phase Services

§ 3.5.1 General

The Architect shall assist the Owner and Construction Manager in establishing a list of prospective contractors. Following the Owner's approval of the Construction Documents, the Architect shall assist the Owner and Construction Manager in (1) obtaining either competitive bids or negotiated proposals; (2) confirming responsiveness of bids or proposals; (3) determining the successful bid or proposal, if any; and (4) awarding and preparing Contracts for Construction.

§ 3.5.2 Competitive Bidding

§ 3.5.2.1 Bidding Documents shall consist of bidding requirements and proposed Contract Documents.

§ 3.5.2.2 The Architect shall assist the Owner and Construction Manager in bidding the Project by

- **.1** facilitating the distribution of Bidding Documents to prospective bidders;
- **.2** organizing and conducting a pre-bid conference for prospective bidders;
- **.3** preparing responses to questions from prospective bidders and providing clarifications and interpretations of the Bidding Documents to the prospective bidders in the form of addenda; and
- **.4** organizing and conducting the opening of bids, and subsequently documenting and distributing the bidding results, as directed by the Owner.

§ 3.5.2.3 If the Bidding Documents permit substitutions, upon the Owner's written authorization, the Architect shall, as an Additional Service, consider requests for substitutions, and prepare and distribute addenda identifying approved substitutions to all prospective bidders.

(Paragraphs deleted)

§ 3.6 Construction Phase Services

§ 3.6.1 General

§ 3.6.1.1 The Architect shall provide administration of the Contract between the Owner and the Contractor as set forth below and in AIA Document A232™–2019, General Conditions of the Contract for Construction, Construction Manager as Adviser Edition. If the Owner and Contractor modify AIA Document A232–2019, those modifications shall not affect the Architect's services under this Agreement unless the Owner and the Architect amend this Agreement.

§ 3.6.1.2 The Architect shall advise and consult with the Owner and Construction Manager during the Construction Phase Services. The Architect shall have authority to act on behalf of the Owner only to the extent provided in this Agreement. The Architect shall not have control over, charge of, or responsibility for the construction means,

AIA Document B132 – 2019. Copyright © 1992, 2009, and 2019. All rights reserved. "The American Institute of Architects," "American Institute of Architects," "AIA," the AIA Logo, and "AIA Contract Documents" are registered trademarks of The American Institute of Architects. This document was produced at 09:34:08 ET on 09/06/2023 under Order No.2114465816 which expires on 08/29/2024, is not for resale, is licensed for one-time use only, and may only be used in accordance with the AIA Contract Documents® Terms of Service. To report copyright violations, e-mail docinfo@aiacontracts.com.
User Notes:
(862082885)

methods, techniques, sequences or procedures, or for safety precautions and programs in connection with the Work, nor shall the Architect be responsible for the Contractors' failure to perform the Work in accordance with the requirements of the Contract Documents. The Architect shall be responsible for the Architect's negligent acts or omissions, but shall not have control over or charge of, and shall not be responsible for acts or omissions of the Construction Manager, or acts or omissions of the Contractors or of any other persons or entities performing portions of the Work.

§ 3.6.1.3 Subject to Section 4.2, and except as provided in Section 3.6.6.5, the Architect's responsibility to provide Construction Phase Services commences with the award of the initial Contract for Construction and terminates on the date the Architect issues the final Certificate for Payment.

§ 3.6.2 Evaluations of the Work

§ 3.6.2.1 The Architect shall visit the site at intervals appropriate to the stage of construction, or as otherwise required in Section 4.2.3, to become generally familiar with the progress and quality of the portion of the Work completed, and to determine, in general, if the Work observed is being performed in a manner indicating that the Work, when fully completed, will be in accordance with the Contract Documents. However, the Architect shall not be required to make exhaustive or continuous on-site inspections to check the quality or quantity of the Work. On the basis of the site visits, the Architect shall keep the Owner reasonably informed about the progress and quality of the portion of the Work completed, and promptly report to the Owner and the Construction Manager (1) known deviations from the Contract Documents, (2) known deviations from the most recent construction schedule submitted by the Construction Manager, and (3) defects and deficiencies observed in the Work.

§ 3.6.2.2 The Architect has the authority to reject Work that does not conform to the Contract Documents and shall notify the Construction Manager about the rejection. Whenever the Architect considers it necessary or advisable, the Architect, upon written authorization from the Owner and notification to the Construction Manager, shall have the authority to require inspection or testing of the Work in accordance with the provisions of the Contract Documents, whether or not the Work is fabricated, installed or completed. However, neither this authority of the Architect nor a decision made in good faith either to exercise or not to exercise such authority shall give rise to a duty or responsibility of the Architect to the Contractors, Subcontractors, suppliers, their agents or employees, or other persons or entities performing portions of the Work.

§ 3.6.2.3 The Architect shall interpret and decide matters concerning performance under, and requirements of, the Contract Documents on written request of the Construction Manager, Owner, or Contractors through the Construction Manager. The Architect's response to such requests shall be made in writing within any time limits agreed upon or otherwise with reasonable promptness.

§ 3.6.2.4 Interpretations and decisions of the Architect shall be consistent with the intent of, and reasonably inferable from, the Contract Documents and shall be in writing or in the form of drawings. When making such interpretations and decisions, the Architect shall endeavor to secure faithful performance by the Owner and Contractors, shall not show partiality to either, and shall not be liable for results of interpretations or decisions rendered in good faith. The Architect's decisions on matters relating to aesthetic effect shall be final if consistent with the intent expressed in the Contract Documents.

§ 3.6.2.5 Unless the Owner and Contractors designate another person to serve as an Initial Decision Maker, as that term is defined in AIA Document A232–2019, the Architect, with the assistance of the Construction Manager, shall render initial decisions on Claims between the Owner and Contractors as provided in the Contract Documents.

§ 3.6.3 Certificates for Payment to Contractor

§ 3.6.3.1 Not more frequently than monthly, the Architect shall review and certify an application for payment. Within seven days after the Architect receives an application for payment forwarded from the Construction Manager, the Architect shall review and certify the application as follows:

.1 Where there is only one Contractor responsible for performing the Work, the Architect shall review the Contractor's Application and Certificate for Payment that the Construction Manager has previously reviewed and certified. The Architect shall certify the amount due the Contractor and shall issue a Certificate for Payment in such amount.

.2 Where there is more than one Contractor responsible for performing different portions of the Project, the Architect shall review the Project Application and Project Certificate for Payment, with the

AIA Document B132 – 2019. Copyright © 1992, 2009, and 2019. All rights reserved. "The American Institute of Architects," "American Institute of Architects," "AIA," the AIA Logo, and "AIA Contract Documents" are registered trademarks of The American Institute of Architects. This document was produced at 09:34:08 ET on 09/06/2023 under Order No.2114465816 which expires on 08/29/2024, is not for resale, is licensed for one-time use only, and may only be used in accordance with the AIA Contract Documents® Terms of Service. To report copyright violations, e-mail docinfo@aiacontracts.com.
User Notes:

(862082885)

Summary of Contractors' Applications for Payment, that the Construction Manager has previously prepared, reviewed, and certified. The Architect shall certify the total amount due all Contractors collectively and shall issue a Project Certificate for Payment in the total of such amounts.

§ 3.6.3.2 The Architect's certification for payment shall constitute a representation to the Owner, based on (1) the Architect's evaluation of the Work as provided in Section 3.6.2, (2) the data comprising the Contractor's Application for Payment or the data comprising the Project Application for Payment, and (3) the recommendation of the Construction Manager, that, to the best of the Architect's knowledge, information and belief, the Work has progressed to the point indicated, the quality of the Work is in accordance with the Contract Documents, and that the Contractors are entitled to payment in the amount certified. The foregoing representations are subject to (1) an evaluation of the Work for conformance with the Contract Documents upon Substantial Completion, (2) results of subsequent tests and inspections, (3) correction of minor deviations from the Contract Documents prior to completion, and (4) specific qualifications expressed by the Architect.

§ 3.6.3.3 The issuance of a Certificate for Payment or a Project Certificate for Payment shall not be a representation that the Architect has (1) made exhaustive or continuous on-site inspections to check the quality or quantity of the Work, (2) reviewed construction means, methods, techniques, sequences or procedures, (3) reviewed copies of requisitions received from Subcontractors and suppliers and other data requested by the Owner to substantiate each Contractor's right to payment, or (4) ascertained how or for what purpose that Contractor has used money previously paid on account of the Contract Sum.

§ 3.6.3.4 The Architect shall maintain a record of the Applications and Certificates for Payment.

§ 3.6.4 Submittals

§ 3.6.4.1 The Architect shall review the Construction Manager's Project submittal schedule and shall not unreasonably delay or withhold approval of the schedule. The Architect's action in reviewing submittals transmitted by the Construction Manager shall be taken in accordance with the approved submittal schedule or, in the absence of an approved submittal schedule, with reasonable promptness while allowing sufficient time, in the Architect's professional judgment, to permit adequate review.

§ 3.6.4.2 The Architect shall review and approve, or take other appropriate action upon, the Contractors' submittals such as Shop Drawings, Product Data and Samples, that the Construction Manager has reviewed, recommended for approval, and transmitted to the Architect. The Architect's review of the submittals shall only be for the limited purpose of checking for conformance with information given and the design concept expressed in the Contract Documents. Review of such submittals is not for the purpose of determining the accuracy and completeness of other information such as dimensions, quantities, and installation or performance of equipment or systems, which are the Contractors' responsibilities. The Architect's review shall not constitute approval of safety precautions or construction means, methods, techniques, sequences or procedures. The Architect's approval of a specific item shall not indicate approval of an assembly of which the item is a component.

§ 3.6.4.3 If the Contract Documents specifically require the Contractors to provide professional design services or certifications by a design professional related to systems, materials or equipment, the Architect shall specify the appropriate performance and design criteria that such services must satisfy. The Architect shall review and take appropriate action on Shop Drawings and other submittals related to the Work designed or certified by the Contractors' design professionals, provided the submittals bear such professionals' seal and signature when submitted to the Architect. The Architect's review shall be for the limited purpose of checking for conformance with information given and the design concept expressed in the Contract Documents. The Architect shall be entitled to rely upon, and shall not be responsible for, the adequacy and accuracy of the services, certifications, and approvals performed or provided by such design professionals.

§ 3.6.4.4 After receipt of the Construction Manager's recommendations, and subject to the provisions of Section 4.2, the Architect shall review and respond to requests for information about the Contract Documents. The Architect, in consultation with the Construction Manager, shall set forth in the Contract Documents the requirements for requests for information. Requests for information shall include, at a minimum, a detailed written statement that indicates the specific Drawings or Specifications in need of clarification and the nature of the clarification requested. The Architect's response to such requests shall be made in writing within any time limits agreed upon, or otherwise with

AIA Document B132 – 2019. Copyright © 1992, 2009, and 2019. All rights reserved. "The American Institute of Architects," "American Institute of Architects," "AIA," the AIA Logo, and "AIA Contract Documents" are registered trademarks of The American Institute of Architects. This document was produced at 09:34:08 ET on 09/06/2023 under Order No.2114465816 which expires on 08/29/2024, is not for resale, is licensed for one-time use only, and may only be used in accordance with the AIA Contract Documents® Terms of Service. To report copyright violations, e-mail docinfo@aiacontracts.com.
User Notes:

reasonable promptness. If appropriate, the Architect shall prepare and issue supplemental Drawings and Specifications in response to the requests for information.

§ 3.6.4.5 The Architect shall maintain a record of submittals and copies of submittals transmitted by the Construction Manager in accordance with the requirements of the Contract Documents.

§ 3.6.5 Changes in the Work

§ 3.6.5.1 The Architect shall review and sign, or take other appropriate action, on Change Orders and Construction Change Directives prepared by the Construction Manager for the Owner's approval and execution in accordance with the Contract Documents.

§ 3.6.5.2 The Architect may order minor changes in the Work that are consistent with the intent of the Contract Documents and do not involve an adjustment in the Contract Sum or an extension of the Contract Time. Such changes shall be effected by written order issued by the Architect through the Construction Manager.

§ 3.6.5.3 The Architect shall maintain records relative to changes in the Work.

§ 3.6.6 Project Completion

§ 3.6.6.1 The Architect, assisted by the Construction Manager, shall:

- **.1** conduct inspections to determine the date of Substantial Completion and the date of final completion;
- **.2** issue a Certificate of Substantial Completion prepared by the Construction Manager;
- **.3** review written warranties and related documents required by the Contract Documents and received from the Contractors, through the Construction Manager; and
- **.4** after receipt of a final Contractor's Application and Certificate for Payment or a final Project Application and Project Certificate for Payment from the Construction Manager, issue a final Certificate for Payment based upon a final inspection indicating that, to the best of the Architect's knowledge, information, and belief, the Work complies with the requirements of the Contract Documents.

§ 3.6.6.2 The Architect's inspections shall be conducted with the Owner and Construction Manager to (1) check conformance of the Work with the requirements of the Contract Documents and (2) verify the accuracy and completeness of the lists submitted by the Construction Manager and Contractors of Work to be completed or corrected.

§ 3.6.6.3 When Substantial Completion has been achieved, the Architect shall inform the Owner about the balance of the Contract Sum remaining to be paid each of the Contractors, including the amount to be retained from the Contract Sum, if any, for final completion or correction of the Work.

§ 3.6.6.4 The Architect shall forward to the Owner the following information received from the Contractors, through the Construction Manager: (1) consent of surety or sureties, if any, to reduction in or partial release of retainage or the making of final payment; (2) affidavits, receipts, releases and waivers of liens, or bonds indemnifying the Owner against liens; and (3) any other documentation required of the Contractors under the Contract Documents.

§ 3.6.6.5 Upon request of the Owner, and prior to the expiration of one year from the date of Substantial Completion, the Architect shall, without additional compensation, conduct a meeting with the Owner and Construction Manager to review the facility operations and performance.

ARTICLE 4 SUPPLEMENTAL AND ADDITIONAL SERVICES

§ 4.1 Supplemental Services

§ 4.1.1 The services listed below are not included in Basic Services but may be required for the Project. The Architect shall provide the listed Supplemental Services only if specifically designated in the table below as the Architect's responsibility, and the Owner shall compensate the Architect as provided in Section 11.2. Unless otherwise specifically addressed in this Agreement, if neither the Owner nor the Architect is designated, the parties agree that the listed Supplemental Service is not being provided for the Project.

(Designate the Architect's Supplemental Services and the Owner's Supplemental Services required for the Project by indicating whether the Architect or Owner shall be responsible for providing the identified Supplemental Service.

AIA Document B132 – 2019. Copyright © 1992, 2009, and 2019. All rights reserved. "The American Institute of Architects," "American Institute of Architects," "AIA," the AIA Logo, and "AIA Contract Documents" are registered trademarks of The American Institute of Architects. This document was produced at 09:34:08 ET on 09/06/2023 under Order No.2114465816 which expires on 08/29/2024, is not for resale, is licensed for one-time use only, and may only be used in accordance with the AIA Contract Documents® Terms of Service. To report copyright violations, e-mail docinfo@aiacontracts.com.
User Notes:

Insert a description of the Supplemental Services in Section 4.1.2 below or attach the description of services as an exhibit to this Agreement.)

Supplemental Services		**Responsibility** *(Architect, Owner or Not Provided)*
§ 4.1.1.1	Assistance with selection of Construction Manager	Not applicable
§ 4.1.1.2	Programming	Not applicable
§ 4.1.1.3	Multiple preliminary designs	Architect, if requested by owner
§ 4.1.1.4	Measured drawings	Architect, if requested by owner
§ 4.1.1.5	Existing facilities surveys	Architect, if requested by owner
§ 4.1.1.6	Site evaluation and planning	Not applicable
§ 4.1.1.7	Building Information Model management responsibilities	Not applicable
§ 4.1.1.8	Development of Building Information Models for post construction use	Not applicable
§ 4.1.1.9	Civil engineering	Not applicable
§ 4.1.1.10	Landscape design	Not applicable
§ 4.1.1.11	Architectural interior design	Architect, if requested by owner
§ 4.1.1.12	Value analysis	Not applicable
§ 4.1.1.13	Cost estimating	Owner
§ 4.1.1.14	On-site project representation	Owner
§ 4.1.1.15	Conformed documents for construction	Architect, if requested by owner
§ 4.1.1.16	As-designed record drawings	Architect, if requested by owner
§ 4.1.1.17	As-constructed record drawings	Architect, if requested by owner
§ 4.1.1.18	Post-occupancy evaluation	Not applicable
§ 4.1.1.19	Facility support services	Not applicable
§ 4.1.1.20	Tenant-related services	Not applicable
§ 4.1.1.21	Architect's coordination of the Owner's consultants	Architect, if requested by owner
§ 4.1.1.22	Telecommunications/data design	Architect, if requested by owner
§ 4.1.1.23	Security evaluation and planning	Architect, if requested by owner
§ 4.1.1.24	Commissioning	Architect, if requested by owner
§ 4.1.1.25	Sustainable Project Services pursuant to Section 4.1.3	Not applicable
§ 4.1.1.26	Historic preservation	Not applicable
§ 4.1.1.27	Furniture, furnishings, and equipment design	Architect, if requested by owner
§ 4.1.1.28	Other services provided by specialty Consultants	To be determined, if required
§ 4.1.1.29	Other Supplemental Services	To be determined
§ 4.1.1.30	**Structural engineering**	Architect, if requested by owner

§ 4.1.2 Description of Supplemental Services

§ 4.1.2.1 A description of each Supplemental Service identified in Section 4.1.1 as the Architect's responsibility is provided below.

(Describe in detail the Architect's Supplemental Services identified in Section 4.1.1 or, if set forth in an exhibit, identify the exhibit. The AIA publishes a number of Standard Form of Architect's Services documents that can be included as an exhibit to describe the Architect's Supplemental Services.)

Not applicable

§ 4.1.2.2 A description of each Supplemental Service identified in Section 4.1.1 as the Owner's responsibility is provided below.

AIA Document B132 – 2019. Copyright © 1992, 2009, and 2019. All rights reserved. "The American Institute of Architects," "American Institute of Architects," "AIA," the AIA Logo, and "AIA Contract Documents" are registered trademarks of The American Institute of Architects. This document was produced at 09:34:08 ET on 09/06/2023 under Order No.2114465816 which expires on 08/29/2024, is not for resale, is licensed for one-time use only, and may only be used in accordance with the AIA Contract Documents® Terms of Service. To report copyright violations, e-mail docinfo@aiacontracts.com.
User Notes:

(862082885)

(Describe in detail the Owner's Supplemental Services identified in Section 4.1.1 or, if set forth in an exhibit, identify the exhibit.)

Not applicable

§ 4.1.3 If the Owner identified a Sustainable Objective in Article 1, the Architect shall provide, as a Supplemental Service, the Sustainability Services required in AIA Document E235™–2019, Sustainable Projects Exhibit, Construction Manager as Adviser Edition, attached to this Agreement. The Owner shall compensate the Architect as provided in Section 11.2.

§ 4.2 Architect's Additional Services

The Architect may provide Additional Services after execution of this Agreement, without invalidating the Agreement. Except for services required due to the fault of the Architect, any Additional Services provided in accordance with this Section 4.2 shall entitle the Architect to compensation pursuant to Section 11.3 and an appropriate adjustment in the Architect's schedule.

§ 4.2.1 Upon recognizing the need to perform the following Additional Services, the Architect shall notify the Owner with reasonable promptness and explain the facts and circumstances giving rise to the need. The Architect shall not proceed to provide the following Additional Services until the Architect receives the Owner's written authorization:

- **.1** Services necessitated by a change in the Initial Information, previous instructions or recommendations given by the Construction Manager or the Owner, approvals given by the Owner, or a material change in the Project including size, quality, complexity, building systems, the Owner's schedule or budget for Cost of the Work, constructability considerations, procurement or delivery method, or bid packages in addition to those listed in Section 1.1.6;
- **.2** Making revisions in Drawings, Specifications, or other documents (as required pursuant to Section 6.7), when such revisions are required because the Construction Manager's estimate of the Cost of the Work exceeds the Owner's budget, except where such excess is due to changes initiated by the Architect in scope, capacities of basic systems, or the kinds and quality of materials, finishes or equipment;
- **.3** Services necessitated by enactment or revision of codes, laws, or regulations, including changing or editing previously prepared Instruments of Service;
- **.4** Changing or editing previously prepared Instruments of Service necessitated by official interpretations of applicable codes, laws or regulations that are either (a) contrary to specific interpretations by the applicable authorities having jurisdiction made prior to the issuance of the building permit, or (b) contrary to requirements of the Instruments of Service when those Instruments of Service were prepared in accordance with the applicable standard of care;
- **.5** Services necessitated by decisions of the Owner or Construction Manager not rendered in a timely manner or any other failure of performance on the part of the Owner, Construction Manager or the Owner's other consultants or contractors;
- **.6** Preparing digital models or other design documentation for transmission to the Owner's consultants and contractors, or to other Owner-authorized recipients;
- **.7** Preparation of design and documentation for alternate bid or proposal requests proposed by the Owner or Construction Manager;
- **.8** Preparation for, and attendance at, a public presentation, meeting or hearing;
- **.9** Preparation for, and attendance at, a dispute resolution proceeding or legal proceeding, except where the Architect is party thereto;
- **.10** Evaluation of the qualifications of entities providing bids or proposals;
- **.11** Consultation concerning replacement of Work resulting from fire or other cause during construction; or
- **.12** Assistance to the Initial Decision Maker, if other than the Architect.

§ 4.2.2 To avoid delay in the Construction Phase, the Architect shall provide the following Additional Services, notify the Owner with reasonable promptness, and explain the facts and circumstances giving rise to the need. If, upon receipt of the Architect's notice, the Owner determines that all or parts of the services are not required, the Owner shall give prompt written notice to the Architect of the Owner's determination. The Owner shall compensate the Architect for the services provided prior to the Architect's receipt of the Owner's notice:

- **.1** Reviewing a Contractor's submittal out of sequence from the Project submittal schedule approved by the Architect;

AIA Document B132 – 2019. Copyright © 1992, 2009, and 2019. All rights reserved. "The American Institute of Architects," "American Institute of Architects," "AIA," the AIA Logo, and "AIA Contract Documents" are registered trademarks of The American Institute of Architects. This document was produced at 09:34:08 ET on 09/06/2023 under Order No.2114465816 which expires on 08/29/2024, is not for resale, is licensed for one-time use only, and may only be used in accordance with the AIA Contract Documents® Terms of Service. To report copyright violations, e-mail docinfo@aiacontracts.com.
User Notes: (862082885)

.2 Responding to the Contractors' requests for information that are not prepared in accordance with the Contract Documents or where such information is available to the Contractors from a careful study and comparison of the Contract Documents, field conditions, other Owner-provided information, Contractor-prepared coordination drawings, or prior Project correspondence or documentation;

.3 Preparing Change Orders, and Construction Change Directives that require evaluation of Contractors' proposals and supporting data, or the preparation or revision of Instruments of Service;

.4 Evaluating an extensive number of Claims as the Initial Decision Maker; or

.5 Evaluating substitutions proposed by the Owner, Construction Manager or Contractors and making subsequent revisions to Instruments of Service resulting therefrom.

§ 4.2.3 The Architect shall provide Construction Phase Services exceeding the limits set forth below as Additional Services. When the limits below are reached, the Architect shall notify the Owner:

.1 Two (2) reviews of each Shop Drawing, Product Data item, sample and similar submittals of the Contractors

.2 Eight (8) visits to the site by the Architect during construction

.3 One (1) inspections for any portion of the Work to determine whether such portion of the Work is substantially complete in accordance with the requirements of the Contract Documents

.4 One (1) inspections for any portion of the Work to determine final completion

§ 4.2.4 Except for services required under Section 3.6.6.5 and those services that do not exceed the limits set forth in Section 4.2.3, Construction Phase Services provided more than 60 days after (1) the date of Substantial Completion of the Work, or (2) the anticipated date of Substantial Completion identified in the Initial Information, whichever is earlier, shall be compensated as Additional Services to the extent the Architect incurs additional cost in providing those Construction Phase Services.

§ 4.2.5 If the services covered by this Agreement have not been completed within Sixteen (16) months of the date of this Agreement, through no fault of the Architect, extension of the Architect's services beyond that time shall be compensated as Additional Services.

ARTICLE 5 OWNER'S RESPONSIBILITIES

§ 5.1 Unless otherwise provided for under this Agreement, the Owner shall provide information in a timely manner regarding requirements for and limitations on the Project, including a written program which shall set forth the Owner's objectives, schedule, constraints and criteria, including space requirements and relationships, flexibility, expandability, special equipment, systems and site requirements.

§ 5.2 The Owner shall retain a Construction Manager to provide services, duties and responsibilities as described in AIA Document C132–2019, Standard Form of Agreement Between Owner and Construction Manager as Adviser. The Owner shall provide the Architect with a copy of the scope of services in the agreement executed between the Owner and the Construction Manager, and any subsequent modifications to the Construction Manager's scope of services in the agreement.

§ 5.3 The Owner shall establish the Owner's budget for the Project, including (1) the budget for the Cost of the Work as defined in Section 6.1; (2) the Owner's other costs; and (3) reasonable contingencies related to all of these costs. The Owner shall update the Owner's budget for the Project as necessary throughout the duration of the Project until final completion. If the Owner significantly increases or decreases the Owner's budget for the Cost of the Work, the Owner shall notify the Architect and the Construction Manager. The Owner and the Architect, in consultation with the Construction Manager, shall thereafter agree to a corresponding change in the Project's scope and quality.

§ 5.3.1 The Owner acknowledges that accelerated, phased or fast-track scheduling provides a benefit, but also carries with it associated risks. Such risks include the Owner incurring costs for the Architect to coordinate and redesign portions of the Project affected by procuring or installing elements of the Project prior to the completion of all relevant Construction Documents, and costs for the Contractors to remove and replace previously installed Work. If the Owner selects accelerated, phased or fast-track scheduling, the Owner agrees to include in the budget for the Project sufficient contingencies to cover such costs.

AIA Document B132 – 2019. Copyright © 1992, 2009, and 2019. All rights reserved. "The American Institute of Architects," "American Institute of Architects," "AIA," the AIA Logo, and "AIA Contract Documents" are registered trademarks of The American Institute of Architects. This document was produced at 09:34:08 ET on 09/06/2023 under Order No.2114465816 which expires on 08/29/2024, is not for resale, is licensed for one-time use only, and may only be used in accordance with the AIA Contract Documents® Terms of Service. To report copyright violations, e-mail docinfo@aiacontracts.com.
User Notes:

§ 5.4 The Owner shall identify a representative authorized to act on the Owner's behalf with respect to the Project. The Owner shall render decisions and approve the Architect's submittals in a timely manner in order to avoid unreasonable delay in the orderly and sequential progress of the Architect's services.

§ 5.5 The Owner shall furnish surveys to describe physical characteristics, legal limitations and utility locations for the site of the Project, and a written legal description of the site. The surveys and legal information shall include, as applicable, grades and lines of streets, alleys, pavements and adjoining property and structures; designated wetlands; adjacent drainage; rights-of-way, restrictions, easements, encroachments, zoning, deed restrictions, boundaries and contours of the site; locations, dimensions, and other necessary data with respect to existing buildings, other improvements and trees; and information concerning available utility services and lines, both public and private, above and below grade, including inverts and depths. All the information on the survey shall be referenced to a Project benchmark.

§ 5.6 The Owner shall furnish services of geotechnical engineers, which may include test borings, test pits, determinations of soil bearing values, percolation tests, evaluations of hazardous materials, seismic evaluation, ground corrosion tests and resistivity tests, including necessary operations for anticipating subsoil conditions, with written reports and appropriate recommendations.

§ 5.7 The Owner shall provide the Supplemental Services designated as the Owner's responsibility in Section 4.1.1.

§ 5.8 If the Owner identified a Sustainable Objective in Article 1, the Owner shall fulfill its responsibilities as required in AIA Document E235™–2019, Sustainable Projects Exhibit, Construction Manager as Adviser Edition, attached to this Agreement.

§ 5.9 The Owner shall coordinate the services of its own consultants with those services provided by the Architect. Upon the Architect's request, the Owner shall furnish copies of the scope of services in the contracts between the Owner and the Owner's consultants. The Owner shall furnish the services of consultants other than those designated as the responsibility of the Architect in this Agreement, or authorize the Architect to furnish them as an Additional Service, when the Architect requests such services and demonstrates that they are reasonably required by the scope of the Project. The Owner shall require that its consultants and contractors maintain insurance, including professional liability insurance, as appropriate to the services or work provided.

§ 5.10 The Owner shall furnish tests, inspections and reports required by law or the Contract Documents, such as structural, mechanical, and chemical tests, tests for air and water pollution, and tests for hazardous materials.

§ 5.11 The Owner shall furnish all legal, insurance and accounting services, including auditing services, that may be reasonably necessary at any time for the Project to meet the Owner's needs and interests.

§ 5.12 The Owner shall provide prompt written notice to the Architect and Construction Manager if the Owner becomes aware of any fault or defect in the Project, including errors, omissions or inconsistencies in the Architect's Instruments of Service.

§ 5.13 The Owner shall communicate with the Contractors and the Construction Manager's consultants through the Construction Manager about matters arising out of or relating to the Contract Documents. The Owner and Construction Manager shall include the Architect in all communications that relate to or affect the Architect's services or professional responsibilities. The Owner shall promptly notify the Architect of the substance of any direct communications between the Owner and the Construction Manager otherwise relating to the Project. Communications by and with the Architect's consultants shall be through the Architect.

§ 5.14 Before executing the Contracts for Construction, the Owner shall coordinate the Architect's duties and responsibilities set forth in the Contracts for Construction with the Architect's services set forth in this Agreement. The Owner shall provide the Architect a copy of the executed agreements between the Owner and Contractors, including the General Conditions of the Contracts for Construction.

§ 5.15 The Owner shall provide the Architect access to the Project site prior to commencement of the Work and shall obligate the Construction Manager and Contractors to provide the Architect access to the Work wherever it is in preparation or progress.

AIA Document B132 – 2019. Copyright © 1992, 2009, and 2019. All rights reserved. "The American Institute of Architects," "American Institute of Architects," "AIA," the AIA Logo, and "AIA Contract Documents" are registered trademarks of The American Institute of Architects. This document was produced at 09:34:08 ET on 09/06/2023 under Order No.2114465816 which expires on 08/29/2024, is not for resale, is licensed for one-time use only, and may only be used in accordance with the AIA Contract Documents® Terms of Service. To report copyright violations, e-mail docinfo@aiacontracts.com.
User Notes:

(862082885)

§ 5.16 Within 15 days after receipt of a written request from the Architect, the Owner shall furnish the requested information as necessary and relevant for the Architect to evaluate, give notice of, or enforce lien rights.

ARTICLE 6 COST OF THE WORK

§ 6.1 For purposes of this Agreement, the Cost of the Work shall be the total cost to the Owner to construct all elements of the Project designed or specified by the Architect and shall include the Contractors' general conditions costs, overhead and profit. The Cost of the Work includes the compensation of the Construction Manager and Construction Manager's consultants during the Construction Phase only, including compensation for reimbursable expenses at the job site, if any. The Cost of the Work also includes the reasonable value of labor, materials, and equipment, donated to, or otherwise furnished by, the Owner. The Cost of the Work does not include the compensation of the Architect; the costs of the land, rights-of-way, financing, or contingencies for changes in the Work; or other costs that are the responsibility of the Owner.

§ 6.2 The Owner's budget for the Cost of the Work is provided in Initial Information, and shall be adjusted throughout the Project as required under Sections 5.3 and 6.4. Evaluations of the Owner's budget for the Cost of the Work represent the Architect's judgment as a design professional.

§ 6.3 The Owner shall require the Construction Manager to include appropriate contingencies for design, bidding or negotiating, price escalation, and market conditions in estimates of the Cost of the Work. The Architect shall be entitled to rely on the accuracy and completeness of estimates of the Cost of the Work the Construction Manager prepares as the Architect progresses with its Basic Services. The Architect shall prepare, as an Additional Service, revisions to the Drawings, Specifications or other documents required due to the Construction Manager's inaccuracies or incompleteness in preparing cost estimates, or due to market conditions the Architect could not reasonably anticipate. The Architect may review the Construction Manager's estimates solely for the Architect's guidance in completion of its services, however, the Architect shall report to the Owner any material inaccuracies and inconsistencies noted during any such review.

§ 6.3.1 If the Architect is providing cost estimating services as a Supplemental Service, and a discrepancy exists between the Construction Manager's cost estimates and the Architect's cost estimates, the Architect and the Construction Manager shall work together to reconcile the cost estimates.

§ 6.4 If, prior to the conclusion of the Design Development Phase, the Construction Manager's estimate of the Cost of the Work exceeds the Owner's budget for the Cost of the Work, the Architect, in consultation with the Construction Manager, shall make appropriate recommendations to the Owner to adjust the Project's size, quality or budget for the Cost of the Work, and the Owner shall cooperate with the Architect in making such adjustments.

§ 6.5 If the Construction Manager's estimate of the Cost of the Work at the conclusion of the Design Development Phase exceeds the Owner's budget for the Cost of the Work, the Owner shall

- **.1** give written approval of an increase in the budget for the Cost of the Work;
- **.2** terminate in accordance with Section 9.5;
- **.3** in consultation with the Architect and Construction Manager, revise the Project program, scope, or quality as required to reduce the Cost of the Work; or
- **.4** implement any other mutually acceptable alternative.

§ 6.6 If the Owner chooses to proceed under Section 6.5.3, the Architect, as an additional service, shall incorporate the revisions in the Construction Documents Phase as necessary to comply with the Owner's budget for the Cost of the Work at the conclusion of the Design Development Phase Services, or the budget as adjusted under Section 6.5.1. The Architect's revisions in the Construction Documents Phase shall be the limit of the Architect's responsibility under this Article 6.

§ 6.7 After incorporation of modifications under Section 6.6, the Architect shall, as an Additional Service, make any required revisions to the Drawings, Specifications or other documents necessitated by subsequent cost estimates that exceed the Owner's budget for the Cost of the Work, except when the excess is due to changes initiated by the Architect in scope, basic systems, or the kinds and quality of materials, finishes or equipment.

AIA Document B132 – 2019. Copyright © 1992, 2009, and 2019. All rights reserved. "The American Institute of Architects," "American Institute of Architects," "AIA," the AIA Logo, and "AIA Contract Documents" are registered trademarks of The American Institute of Architects. This document was produced at 09:34:08 ET on 09/06/2023 under Order No.2114465816 which expires on 08/29/2024, is not for resale, is licensed for one-time use only, and may only be used in accordance with the AIA Contract Documents® Terms of Service. To report copyright violations, e-mail docinfo@aiacontracts.com.
User Notes: (862082885)

ARTICLE 7 COPYRIGHTS AND LICENSES

§ 7.1 The Architect and the Owner warrant that in transmitting Instruments of Service, or any other information, the transmitting party is the copyright owner of such information or has permission from the copyright owner to transmit such information for its use on the Project.

§ 7.2 The Architect and the Architect's consultants shall be deemed the authors and owners of their respective Instruments of Service, including the Drawings and Specifications, and shall retain all common law, statutory and other reserved rights, including copyrights. Submission or distribution of Instruments of Service to meet official regulatory requirements or for similar purposes in connection with the Project is not to be construed as publication in derogation of the reserved rights of the Architect and the Architect's consultants.

§ 7.3 The Architect grants to the Owner a nonexclusive license to use the Architect's Instruments of Service solely and exclusively for purposes of constructing, using, maintaining, altering and adding to the Project, provided that the Owner substantially performs its obligations under this Agreement, including prompt payment of all sums due pursuant to Article 9 and Article 11. The Architect shall obtain similar nonexclusive licenses from the Architect's consultants consistent with this Agreement. The license granted under this section permits the Owner to authorize the Contractors, Construction Manager, Subcontractors, Sub-subcontractors, and suppliers, as well as the Owner's consultants and Separate Contractors, to reproduce applicable portions of the Instruments of Service, subject to any protocols established pursuant to Section 1.3, solely and exclusively for use in performing services or construction for the Project. If the Architect rightfully terminates this Agreement for cause as provided in Section 9.4, the license granted in this Section 7.3 shall terminate.

§ 7.3.1 In the event the Owner uses the Instruments of Service without retaining the authors of the Instruments of Service, the Owner releases the Architect and Architect's consultant(s) from all claims and causes of action arising from such uses. The Owner, to the extent permitted by law, further agrees to indemnify and hold harmless the Architect and its consultants from all costs and expenses, including the cost of defense, related to claims and causes of action asserted by any third person or entity to the extent such costs and expenses arise from the Owner's use of the Instruments of Service under this Section 7.3.1. The terms of this Section 7.3.1 shall not apply if the Owner rightfully terminates this Agreement for cause under Section 9.4.

§ 7.4 Except for the licenses granted in this Article 7, no other license or right shall be deemed granted or implied under this Agreement. The Owner shall not assign, delegate, sublicense, pledge or otherwise transfer any license granted herein to another party without the prior written agreement of the Architect. Any unauthorized use of the Instruments of Service shall be at the Owner's sole risk and without liability to the Architect and the Architect's consultants.

§ 7.5 Except as otherwise stated in Section 7.3, the provisions of this Article 7 shall survive the termination of this Agreement.

ARTICLE 8 CLAIMS AND DISPUTES

§ 8.1 General

§ 8.1.1 The Owner and Architect shall commence all claims and causes of action against the other and arising out of or related to this Agreement, whether in contract, tort, or otherwise, in accordance with the requirements of the binding dispute resolution method selected in this Agreement and within the period specified by applicable law, but in any case not more than 10 years after the date of Substantial Completion of the Work. The Owner and Architect waive all claims and causes of action not commenced in accordance with this Section 8.1.1.

§ 8.1.2 To the extent damages are covered by property insurance, the Owner and Architect waive all rights against each other and against the contractors, consultants, agents and employees of the other for damages, except such rights as they may have to the proceeds of such insurance as set forth in AIA Document A232–2019, General Conditions of the Contract for Construction. The Owner or the Architect, as appropriate, shall require of the Construction Manager, contractors, consultants, agents and employees of any of them, similar waivers in favor of the other parties enumerated herein.

§ 8.1.3 The Architect shall indemnify and hold the Owner and the Owner's officers and employees harmless from and against damages, losses and judgments arising from claims by third parties, including reasonable attorneys' fees and expenses recoverable under applicable law, but only to the extent they are caused by the negligent acts or omissions of the

AIA Document B132 – 2019. Copyright © 1992, 2009, and 2019. All rights reserved. "The American Institute of Architects," "American Institute of Architects," "AIA," the AIA Logo, and "AIA Contract Documents" are registered trademarks of The American Institute of Architects. This document was produced at 09:34:08 ET on 09/06/2023 under Order No.2114465816 which expires on 08/29/2024, is not for resale, is licensed for one-time use only, and may only be used in accordance with the AIA Contract Documents® Terms of Service. To report copyright violations, e-mail docinfo@aiacontracts.com.
User Notes:

Architect, its employees and its consultants in the performance of professional services under this Agreement. The Architect's obligation to indemnify and hold the Owner and the Owner's officers and employees harmless does not include a duty to defend. The Architect's duty to indemnify the Owner under this Section 8.1.3 shall be limited to the available proceeds of the insurance coverage required by this Agreement.

§ 8.1.4 The Architect and Owner waive consequential damages for claims, disputes or other matters in question arising out of or relating to this Agreement. This mutual waiver is applicable, without limitation, to all consequential damages due to either party's termination of this Agreement, except as specifically provided in Section 9.7.

§ 8.2 Mediation

§ 8.2.1 Any claim, dispute, or other matter in question arising out of or related to this Agreement shall be subject to mediation as a condition precedent to binding dispute resolution. If such matter relates to or is the subject of a lien arising out of the Architect's services, the Architect may proceed in accordance with applicable law to comply with the lien notice or filing deadlines prior to resolution of the matter by mediation or by binding dispute resolution.

§ 8.2.2 The Owner and Architect shall endeavor to resolve claims, disputes and other matters in question between them by mediation, which, unless the parties mutually agree otherwise, shall be administered by the American Arbitration Association in accordance with its Construction Industry Mediation Procedures in effect on the date of this Agreement. A request for mediation shall be made in writing, delivered to the other party to this Agreement, and filed with the person or entity administering the mediation. The request may be made concurrently with the filing of a complaint or other appropriate demand for binding dispute resolution but, in such event, mediation shall proceed in advance of binding dispute resolution proceedings, which shall be stayed pending mediation for a period of 60 days from the date of filing, unless stayed for a longer period by agreement of the parties or court order. If an arbitration proceeding is stayed pursuant to this section, the parties may nonetheless proceed to the selection of the arbitrator(s) and agree upon a schedule for later proceedings.

§ 8.2.3 The parties shall share the mediator's fee and any filing fees equally. The mediation shall be held in the place where the Project is located, unless another location is mutually agreed upon. Agreements reached in mediation shall be enforceable as settlement agreements in any court having jurisdiction thereof.

§ 8.2.4 If the parties do not resolve a dispute through mediation pursuant to this Section 8.2, the method of binding dispute resolution shall be the following:
(Check the appropriate box.)

[X] Arbitration pursuant to Section 8.3 of this Agreement

[ ] Litigation in a court of competent jurisdiction

[ ] Other: *(Specify)*

If the Owner and Architect do not select a method of binding dispute resolution, or do not subsequently agree in writing to a binding dispute resolution method other than litigation, the dispute will be resolved in a court of competent jurisdiction.

§ 8.3 Arbitration

§ 8.3.1 If the parties have selected arbitration as the method for binding dispute resolution in this Agreement any claim, dispute or other matter in question arising out of or related to this Agreement subject to, but not resolved by, mediation shall be subject to arbitration, which, unless the parties mutually agree otherwise, shall be administered by the American Arbitration Association in accordance with its Construction Industry Arbitration Rules in effect on the date of this Agreement. A demand for arbitration shall be made in writing, delivered to the other party to this Agreement, and filed with the person or entity administering the arbitration.

§ 8.3.1.1 A demand for arbitration shall be made no earlier than concurrently with the filing of a request for mediation, but in no event shall it be made after the date when the institution of legal or equitable proceedings based on the claim, dispute or other matter in question would be barred by the applicable statute of limitations. For statute of limitations

AIA Document B132 – 2019. Copyright © 1992, 2009, and 2019. All rights reserved. "The American Institute of Architects," "American Institute of Architects," "AIA," the AIA Logo, and "AIA Contract Documents" are registered trademarks of The American Institute of Architects. This document was produced at 09:34:08 ET on 09/06/2023 under Order No.2114465816 which expires on 08/29/2024, is not for resale, is licensed for one-time use only, and may only be used in accordance with the AIA Contract Documents® Terms of Service. To report copyright violations, e-mail docinfo@aiacontracts.com.
User Notes:

(862082885)

purposes, receipt of a written demand for arbitration by the person or entity administering the arbitration shall constitute the institution of legal or equitable proceedings based on the claim, dispute or other matter in question.

§ 8.3.2 The foregoing agreement to arbitrate, and other agreements to arbitrate with an additional person or entity duly consented to by parties to this Agreement, shall be specifically enforceable in accordance with applicable law in any court having jurisdiction thereof.

§ 8.3.3 The award rendered by the arbitrator(s) shall be final, and judgment may be entered upon it in accordance with applicable law in any court having jurisdiction thereof.

§ 8.3.4 Consolidation or Joinder

§ 8.3.4.1 Either party, at its sole discretion, may consolidate an arbitration conducted under this Agreement with any other arbitration to which it is a party provided that (1) the arbitration agreement governing the other arbitration permits consolidation, (2) the arbitrations to be consolidated substantially involve common issues of law or fact, and (3) the arbitrations employ materially similar procedural rules and methods for selecting arbitrator(s).

§ 8.3.4.2 Either party, at its sole discretion, may include by joinder persons or entities substantially involved in a common question of law or fact whose presence is required if complete relief is to be accorded in arbitration, provided that the party sought to be joined consents in writing to such joinder. Consent to arbitration involving an additional person or entity shall not constitute consent to arbitration of any claim, dispute or other matter in question not described in the written consent.

§ 8.3.4.3 The Owner and Architect grant to any person or entity made a party to an arbitration conducted under this Section 8.3, whether by joinder or consolidation, the same rights of joinder and consolidation as the Owner and Architect under this Agreement.

§ 8.4 The provisions of this Article 8 shall survive the termination of this Agreement.

ARTICLE 9 TERMINATION OR SUSPENSION

§ 9.1 If the Owner fails to make payments to the Architect in accordance with this Agreement, such failure shall be considered substantial nonperformance and cause for termination or, at the Architect's option, cause for suspension of performance of services under this Agreement. If the Architect elects to suspend services, the Architect shall give seven days' written notice to the Owner before suspending services. In the event of a suspension of services, the Architect shall have no liability to the Owner for delay or damage caused the Owner because of such suspension of services. Before resuming services, the Owner shall pay the Architect all sums due prior to suspension and any expenses incurred in the interruption and resumption of the Architect's services. The Architect's fees for the remaining services and the time schedules shall be equitably adjusted.

§ 9.2 If the Owner suspends the Project, the Architect shall be compensated for services performed prior to notice of such suspension. When the Project is resumed, the Architect shall be compensated for expenses incurred in the interruption and resumption of the Architect's services. The Architect's fees for the remaining services and the time schedules shall be equitably adjusted.

§ 9.3 If the Owner suspends the Project for more than 90 cumulative days for reasons other than the fault of the Architect, the Architect may terminate this Agreement by giving not less than seven days' written notice.

§ 9.4 Either party may terminate this Agreement upon not less than seven days' written notice should the other party fail substantially to perform in accordance with the terms of this Agreement through no fault of the party initiating the termination.

§ 9.5 The Owner may terminate this Agreement upon not less than seven days' written notice to the Architect for the Owner's convenience and without cause.

§ 9.6 If the Owner terminates this Agreement for its convenience pursuant to Section 9.5, or if the Architect terminates this Agreement pursuant to Section 9.3, the Owner shall compensate the Architect for services performed prior to termination, Reimbursable Expenses incurred, and costs attributable to termination, including the costs attributable to the Architect's termination of consultant agreements.

AIA Document B132 – 2019. Copyright © 1992, 2009, and 2019. All rights reserved. "The American Institute of Architects," "American Institute of Architects," "AIA," the AIA Logo, and "AIA Contract Documents" are registered trademarks of The American Institute of Architects. This document was produced at 09:34:08 ET on 09/06/2023 under Order No.2114465816 which expires on 08/29/2024, is not for resale, is licensed for one-time use only, and may only be used in accordance with the AIA Contract Documents® Terms of Service. To report copyright violations, e-mail docinfo@aiacontracts.com.
User Notes:

(862082885)

§ 9.7 In addition to any amounts paid under Section 9.6, if the Owner terminates this Agreement for its convenience pursuant to Section 9.5, or the Architect terminates this Agreement pursuant to Section 9.3, the Owner shall pay to the Architect the following fees:
(Set forth below the amount of any termination or licensing fee, or the method for determining any termination or licensing fee.)

.1 Termination Fee:

$10,000.00

.2 Licensing Fee if the Owner intends to continue using the Architect's Instruments of Service:

Not applicable

§ 9.8 Except as otherwise expressly provided herein, this Agreement shall terminate one year from the date of Substantial Completion.

§ 9.9 The Owner's rights to use the Architect's Instruments of Service in the event of a termination of this Agreement are set forth in Article 7 and Section 9.7.

ARTICLE 10 MISCELLANEOUS PROVISIONS

§ 10.1 This Agreement shall be governed by the law of the place where the Project is located, excluding that jurisdiction's choice of law rules. If the parties have selected arbitration as the method of binding dispute resolution, the Federal Arbitration Act shall govern Section 8.3.

§ 10.2 Terms in this Agreement shall have the same meaning as those in AIA Document A232–2019, General Conditions of the Contract for Construction, Construction Manager as Adviser Edition, except for purposes of this Agreement, the term "Work" shall include the work of all Contractors under the administration of the Architect and Construction Manager.

§ 10.3 The Owner and Architect, respectively, bind themselves, their agents, successors, assigns, and legal representatives to this Agreement. Neither the Owner nor the Architect shall assign this Agreement without the written consent of the other, except that the Owner may assign this Agreement to a lender providing financing for the Project if the lender agrees to assume the Owner's rights and obligations under this Agreement, and including any payments due to the Architect by the Owner prior to the assignment.

§ 10.4 If the Owner requests the Architect to execute certificates, the proposed language of such certificates shall be submitted to the Architect for review at least 14 days prior to the requested dates of execution. If the Owner requests the Architect to execute consents reasonably required to facilitate assignment to a lender, the Architect shall execute all such consents that are consistent with this Agreement, provided the proposed consent is submitted to the Architect for review at least 14 days prior to execution. The Architect shall not be required to execute certificates or consents that would require knowledge, services, or responsibilities beyond the scope of this Agreement.

§ 10.5 Nothing contained in this Agreement shall create a contractual relationship with, or a cause of action in favor of, a third party against either the Owner or Architect.

§ 10.6 Unless otherwise required in this Agreement, the Architect shall have no responsibility for the discovery, presence, handling, removal or disposal of, or exposure of persons to, hazardous materials or toxic substances in any form at the Project site.

§ 10.7 The Architect shall have the right to include photographic or artistic representations of the design of the Project among the Architect's promotional and professional materials. The Architect shall be given reasonable access to the completed Project to make such representations. However, the Architect's materials shall not include the Owner's confidential or proprietary information if the Owner has previously advised the Architect in writing of the specific information considered by the Owner to be confidential or proprietary. The Owner shall provide professional credit for

AIA Document B132 – 2019. Copyright © 1992, 2009, and 2019. All rights reserved. "The American Institute of Architects," "American Institute of Architects," "AIA," the AIA Logo, and "AIA Contract Documents" are registered trademarks of The American Institute of Architects. This document was produced at 09:34:08 ET on 09/06/2023 under Order No.2114465816 which expires on 08/29/2024, is not for resale, is licensed for one-time use only, and may only be used in accordance with the AIA Contract Documents® Terms of Service. To report copyright violations, e-mail docinfo@aiacontracts.com.
User Notes:

the Architect in the Owner's promotional materials for the Project. This Section 10.7 shall survive the termination of this Agreement unless the Owner terminates this Agreement for cause pursuant to Section 9.4.

§ 10.8 If the Architect or Owner receives information specifically designated as "confidential" or "business proprietary," the receiving party shall keep such information strictly confidential and shall not disclose it to any other person except as set forth in Section 10.8.1. This Section 10.8 shall survive the termination of this Agreement.

§ 10.8.1 The receiving party may disclose "confidential" or "business proprietary" information after 7 days' notice to the other party, when required by law, arbitrator's order, or court order, including a subpoena or other form of compulsory legal process issued by a court or governmental entity, or to the extent such information is reasonably necessary for the receiving party to defend itself in any dispute. The receiving party may also disclose such information to its employees, consultants, or contractors in order to perform services or work solely and exclusively for the Project, provided those employees, consultants and contractors are subject to the restrictions on the disclosure and use of such information as set forth in this Section 10.8.

§ 10.9 The invalidity of any provision of the Agreement shall not invalidate the Agreement or its remaining provisions. If it is determined that any provision of the Agreement violates any law, or is otherwise invalid or unenforceable, then that provision shall be revised to the extent necessary to make that provision legal and enforceable. In such case the Agreement shall be construed, to the fullest extent permitted by law, to give effect to the parties' intentions and purposes in executing the Agreement.

ARTICLE 11 COMPENSATION

§ 11.1 For the Architect's Basic Services described under Article 3, the Owner shall compensate the Architect as follows:

.1 Stipulated Sum
(Insert amount)

.2 Percentage Basis
(Insert percentage value)

Compensation shall be a percentage of construction cost equal to nine and three quarter percent (9.75%). It is agreed that at the end of the Design Development phase, the percentage fee, based on the Construction Manager's Design Development estimate including contingencies, shall be converted to a stipulated sum fee.

.3 Other
(Describe the method of compensation)

§ 11.2 For the Architect's Supplemental Services designated in Section 4.1.1 and for any Sustainability Services required pursuant to Section 4.1.3, the Owner shall compensate the Architect as follows:
(Insert amount of, or basis for, compensation. If necessary, list specific services to which particular methods of compensation apply.)

Hourly, based on annual rates applicable on the first day of January, each year unless it is agreed that the cost for any particular Additional Service shall be a percentage of the related cost

§ 11.3 For Additional Services that may arise during the course of the Project, including those under Section 4.2, the Owner shall compensate the Architect as follows:
(Insert amount of, or basis for, compensation.)

Hourly, based on annual rates applicable on the first day of January, each year unless it is agreed that the cost for any particular Additional Service shall be a percentage of the related cost

AIA Document B132 – 2019. Copyright © 1992, 2009, and 2019. All rights reserved. "The American Institute of Architects," "American Institute of Architects," "AIA," the AIA Logo, and "AIA Contract Documents" are registered trademarks of The American Institute of Architects. This document was produced at 09:34:08 ET on 09/06/2023 under Order No.2114465816 which expires on 08/29/2024, is not for resale, is licensed for one-time use only, and may only be used in accordance with the AIA Contract Documents® Terms of Service. To report copyright violations, e-mail docinfo@aiacontracts.com.
User Notes:

§ 11.4 Compensation for Supplemental and Additional Services of the Architect's consultants when not included in Sections 11.2 or 11.3, shall be the amount invoiced to the Architect plus ten percent (10 %), or as follows:
(Insert amount of, or basis for computing, Architect's consultants' compensation for Supplemental or Additional Services.)

§ 11.5 When compensation for Basic Services is based on a stipulated sum or a percentage basis, the proportion of compensation for each phase of services shall be as follows:

Schematic Design Phase	Fifteen	percent (	15	%)
Design Development Phase	Twenty	percent (	20	%)
Construction Documents Phase	Fourty	percent (	40	%)
Procurement Phase	Five	percent (	5	%)
Construction Phase	Twenty	percent (	20	%)
Total Basic Compensation	one hundred	percent (	100	%)

The Owner acknowledges that with an accelerated Project delivery or multiple bid package process, the Architect may be providing its services in multiple Phases simultaneously. Therefore, the Architect shall be permitted to invoice monthly in proportion to services performed in each Phase of Services, as appropriate.

§ 11.6 When compensation identified in Section 11.1 is on a percentage basis, progress payments for each phase of Basic Services shall be calculated by multiplying the percentages identified in this Article by the Owner's most recent budget for the Cost of the Work. Compensation paid in previous progress payments shall not be adjusted based on subsequent updates to the Owner's budget for the Cost of the Work.

§ 11.6.1 When compensation is on a percentage basis and any portions of the Project are deleted or otherwise not constructed, compensation for those portions of the Project shall be payable to the extent services are performed on those portions. The Architect shall be entitled to compensation in accordance with this Agreement for all services performed whether or not the Construction Phase is commenced.

§ 11.7 The hourly billing rates for services of the Architect and the Architect's consultants are set forth below. The rates shall be adjusted in accordance with the Architect's and Architect's consultants' normal review practices.
(If applicable, attach an exhibit of hourly billing rates or insert them below.)

Hourly, based on annual rates applicable on the first day of January each year.

Employee or Category	**Rate ($0.00)**

§ 11.8 Compensation for Reimbursable Expenses
§ 11.8.1 Reimbursable Expenses are in addition to compensation for Basic, Supplemental, and Additional Services and include expenses incurred by the Architect and the Architect's consultants directly related to the Project, as follows:

- **.1** Transportation and authorized out-of-town travel and subsistence;
- **.2** Long distance services, dedicated data and communication services, teleconferences, Project web sites, and extranets;
- **.3** Permitting and other fees required by authorities having jurisdiction over the Project;
- **.4** Printing, reproductions, plots, and standard form documents;
- **.5** Postage, handling, and delivery;
- **.6** Expense of overtime work requiring higher than regular rates, if authorized in advance by the Owner;
- **.7** Renderings, physical models, mock-ups, professional photography, and presentation materials requested by the Owner or required for the Project;

AIA Document B132 – 2019. Copyright © 1992, 2009, and 2019. All rights reserved. "The American Institute of Architects," "American Institute of Architects," "AIA," the AIA Logo, and "AIA Contract Documents" are registered trademarks of The American Institute of Architects. This document was produced at 09:34:08 ET on 09/06/2023 under Order No.2114465816 which expires on 08/29/2024, is not for resale, is licensed for one-time use only, and may only be used in accordance with the AIA Contract Documents® Terms of Service. To report copyright violations, e-mail docinfo@aiacontracts.com.
User Notes:

.8 If required by the Owner, and with the Owner's prior written approval, the Architect's consultants' expenses of professional liability insurance dedicated exclusively to this Project, or the expense of additional insurance coverage or limits in excess of that normally maintained by the Architect's consultants;

.9 All taxes levied on professional services and on reimbursable expenses;

.10 Site office expenses;

.11 Registration fees and any other fees charged by the Certifying Authority or by other entities as necessary to achieve the Sustainable Objective; and

.12 Other similar Project-related expenditures.

§ 11.8.2 For Reimbursable Expenses the compensation shall be the expenses incurred by the Architect and the Architect's consultants plus zero percent (0 %) of the expenses incurred.

§ 11.9 Architect's Insurance

If the types and limits of coverage required in Section 2.6 are in addition to the types and limits the Architect normally maintains, the Owner shall pay the Architect for the additional costs incurred by the Architect for the additional coverages as set forth below:

(Insert the additional coverages the Architect is required to obtain in order to satisfy the requirements set forth in Section 2.6, and for which the Owner shall reimburse the Architect.)

Not applicable

§ 11.10 Payments to the Architect

§ 11.10.1 Initial Payments

§ 11.10.1.1 An initial payment of zero ($ 0) shall be made upon execution of this Agreement and is the minimum payment under this Agreement. It shall be credited to the Owner's account in the final invoice.

§ 11.10.1.2 If a Sustainability Certification is part of the Sustainable Objective, an initial payment to the Architect of zero ($ 0) shall be made upon execution of this Agreement for registration fees and other fees payable to the Certifying Authority and necessary to achieve the Sustainability Certification. The Architect's payments to the Certifying Authority shall be credited to the Owner's account at the time the expense is incurred.

§ 11.10.2 Progress Payments

§ 11.10.2.1 Unless otherwise agreed, payments for services shall be made monthly in proportion to services performed. Payments are due and payable upon presentation of the Architect's invoice. Amounts unpaid sixty (60) days after the invoice date shall bear interest at the rate entered below, or in the absence thereof at the legal rate prevailing from time to time at the principal place of business of the Architect.

(Insert rate of monthly or annual interest agreed upon.)

zero % 0

§ 11.10.2.2 The Owner shall not withhold amounts from the Architect's compensation to impose a penalty or liquidated damages on the Architect, or to offset sums requested by or paid to Contractors for the cost of changes in the Work, unless the Architect agrees or has been found liable for the amounts in a binding dispute resolution proceeding.

§ 11.10.2.3 Records of Reimbursable Expenses, expenses pertaining to Supplemental and Additional Services, and services performed on the basis of hourly rates shall be available to the Owner at mutually convenient times.

ARTICLE 12 SPECIAL TERMS AND CONDITIONS

Special terms and conditions that modify this Agreement are as follows:

(Include other terms and conditions applicable to this Agreement.)

12.1 Field observations under Basic Services will be provided with an average of two (2) site visits monthly. Basic services include a maximum of 8 visits. Authorization to exceed this amount will require an Additional Services amendment to this agreement.

12.2 Additional Services will be required if a revision in project scope and/or quality level is required to reduce the Construction Cost if it is exceeded by the sum of the lowest bids. Specifically, if the

AIA Document B132 – 2019. Copyright © 1992, 2009, and 2019. All rights reserved. "The American Institute of Architects," "American Institute of Architects," "AIA," the AIA Logo, and "AIA Contract Documents" are registered trademarks of The American Institute of Architects. This document was produced at 09:34:08 ET on 09/06/2023 under Order No.2114465816 which expires on 08/29/2024, is not for resale, is licensed for one-time use only, and may only be used in accordance with the AIA Contract Documents® Terms of Service. To report copyright violations, e-mail docinfo@aiacontracts.com.
User Notes:
(862082885)

Architect is asked to modify the drawings and specifications as necessary to comply with the latest estimated construction cost as prepared by the Construction Manager, the Architect shall be entitled to payment for all services performed in accordance with these modifications, whether or not the construction phase is commenced.

12.3 If it is determined by the owner that new furniture is to be incorporated into this project, compensation for this supplemental service will be 9.75% of the furniture package budget. For existing furniture to be inventoried so to be reused, reconfigured, or refurbished, compensation for this supplemental service will be hourly as needed, if requested by owner.

ARTICLE 13 SCOPE OF THE AGREEMENT

§ 13.1 This Agreement represents the entire and integrated agreement between the Owner and the Architect and supersedes all prior negotiations, representations or agreements, either written or oral. This Agreement may be amended only by written instrument signed by both the Owner and Architect.

§ 13.2 This Agreement is comprised of the following documents identified below:

.1 AIA Document B132™–2019, Standard Form Agreement Between Owner and Architect, Construction Manager as Adviser Edition

.2

(Paragraphs deleted)

This Agreement is entered into as of the day and year first written above.

OWNER *(Signature)*	**ARCHITECT** *(Signature)*
	Tyler L. Johnson President – MN #54078
(Printed name and title)	*(Printed name, title, and license number, if applicable)*

AIA Document B132 – 2019. Copyright © 1992, 2009, and 2019. All rights reserved. "The American Institute of Architects," "American Institute of Architects," "AIA," the AIA Logo, and "AIA Contract Documents" are registered trademarks of The American Institute of Architects. This document was produced at 09:34:08 ET on 09/06/2023 under Order No.2114465816 which expires on 08/29/2024, is not for resale, is licensed for one-time use only, and may only be used in accordance with the AIA Contract Documents® Terms of Service. To report copyright violations, e-mail docinfo@aiacontracts.com.
User Notes:

Nicollet County Board of Commissioners
Board Meeting Agenda Item

Agenda Item:

Dissolution of the Brown-Nicollet Community Heath Board - Joint Powers Agreement

Primary Originating Division/Dept.: Administration

Meeting Date: 09/12/2023

Contact: Mandy Landkamer Title: County Administrator

Item Type: (Select One) Regular Agenda

Amount of Time Requested 10 minutes

Presenter: Mandy Landkamer Title: County Administrator

Attachments: ◉ Yes ○ No

County Strategy: (Select One) Programs and Services - deliver value-added quality services

BACKGROUND/JUSTIFICATION:

Consideration of the attached resolution to withdraw from the Brown-Nicollet Community Health Board (BNCHB) Joint Powers Agreement with Brown County.

A review of the current needs of residents of Nicollet County has found that forming a County Community Health Board would allow services to be provided more effectively and efficiently.

A withdrawing member of the BNCHB must provide notice of at least one (1) year before the beginning of the calendar year in which the withdrawal takes place. The withdrawal is proposed to be effective on January 1, 2025.

Supporting Documents: ◉ Attached ○ In Signature Folder ○ None

Prior Board Action Taken on this Agenda Item: ◉ Yes ○ No

If "yes", when? (provide year; mm/dd/yy if known) 2009

Approved by County Attorney's Office: ◉ Yes ○ No ○ N/A

ACTION REQUESTED:

Approval of the resolution dissolving the Community Health Board - Joint Powers Agreement and transition the Environmental Health Director as a full time Nicollet County employee

FISCAL IMPACT: Other
(Select One)

If "Other", specify

FUNDING
County Dollars =

Other
(Select One)

FTE IMPACT: Increase FTE
(Select One)

Total

If "Increase or "Decrease" specify:

Related Financial/FTE Comments:

RESOLUTION TO WITHDRAW FROM THE
BROWN-NICOLLET COMMUNITY HEALTH BOARD
JOINT POWERS AGREEMENT

WHEREAS, Brown County and Nicollet County jointly formed the Brown-Nicollet Community Health Board [hereinafter "BNCHB"] through the adoption of a Joint Powers Agreement in 1990, that was further amended and revised by the Joint Powers Agreement between Brown and Nicollet Counties as a Joint Community Health Board, signed on the 12th day of August, 2009, by Brown County and on the 6th day of August, 2009, by Nicollet County; and

WHEREAS, the BNCHB was created to allow the counties to collaborate to serve the needs and interests of both Brown County and Nicollet County residents; and

WHEREAS, the Nicollet County Board of Commissioners has engaged in discussion and examination of the current needs of the residents of Nicollet County related to the services currently provided through the BNCHB as set forth in Minnesota Statutes Chapter 145A; and

WHEREAS, the Nicollet County Board of Commissioners has concluded that it can more effectively and efficiently meet the needs of Nicollet County residents by forming its own Community Health Board under Minnesota Statutes Chapter 145A; and

WHEREAS, Nicollet County Board of Commissioners intends to withdraw from the BNCHB as of January 1, 2025;

WHEREAS, a withdrawing member of the BNCHB must give notice at least one (1) year before the beginning of the calendar year in which the withdrawal takes place; and

NOW THEREFORE IT IS HEREBY RESOLVED THAT,

Nicollet County does hereby give notice to the Brown-Nicollet Community Health Board that Nicollet County is withdrawing from the Brown-Nicollet Community Health Board, effective January 1, 2025.

Nicollet County does hereby give notice to the Brown County Board of Commissioners, through service of this Resolution by certified mail upon the Brown County Board of Commissioners Chairperson, that Nicollet County is withdrawing from the Brown-Nicollet Community Health Board, effective January 1, 2025.

Nicollet County does hereby give notice to the Minnesota Department of Health, through service of this Resolution by certified mail, that Nicollet County is withdrawing from the Brown-Nicollet Community Health Board, effective January 1, 2025.

BE IT FURTHER RESOLVED Staff shall work with the Brown-Nicollet County Community Health Board to effect the withdrawal and fulfillment of all obligations under the Joint Powers Agreement.

Dated the 12th day of September, 2023

_____
Jack Kolars, Chair
Nicollet County Board of Commissioners

ATTEST:

_____
Mandy Landkamer
County Administrator/Clerk to the Board

Nicollet County Board of Commissioners
Board Meeting Agenda Item

Agenda Item:

Victim/Witness Coordinator Grant Renewal

Primary Originating Division/Dept.: County Attorney's Office

Contact: Michelle Zehnder Fischer Title: County Attorney

Amount of Time Requested 5 minutes

Presenter: Michelle Zehnder Fischer Title: County Attorney

Meeting Date: 9/12/2023

Item Type: (Select One) Regular Agenda

Attachments: (•) Yes ( ) No

County Strategy: (Select One) Financial Security - prudent use of taxpayer resources

BACKGROUND/JUSTIFICATION:

The Nicollet County Attorney's Office applied for and received a $70,000 one-year grant for purposes of continuing the Victim/Witness Coordinator position. This position serves crime victims and witnesses and engages in community outreach. The grant period runs from October 1, 2023 through September 30, 2024.

Supporting Documents: (•) Attached ( ) In Signature Folder ( ) None

Prior Board Action Taken on this Agenda Item: (•) Yes ( ) No

If "yes", when? (provide year; mm/dd/yy if known) 3/14/2023

Approved by County Attorney's Office: (•) Yes ( ) No ( ) N/A

ACTION REQUESTED:

Approve and execute grant agreement that is attached.

FISCAL IMPACT: (Select One) Included in current budget

If "Other", specify

FUNDING

County Dollars =	$45,285.01
Grant (Select One)	$70,000.0
Total	$115,285.01

FTE IMPACT: (Select One) No FTE change

If "Increase or "Decrease" specify:

Related Financial/FTE Comments:

The grant is included in the current budget and it was added to the 2024 budget.

Minnesota Department of Public Safety ("State") Office of Justice Programs 445 Minnesota Street, Suite 2300 St. Paul, MN 55101-2139	**Grant Program:** Crime Victim Services 2024 **Grant Contract Agreement No.:** A-CVS-2024-NICCAO-047
Grantee: Nicollet County Attorney's Office 501 South Minnesota Avenue St. Peter, Minnesota 56082	**Grant Contract Agreement Term:** **Effective Date:** 10/1/2023 **Expiration Date:** 9/30/2024
Grantee's Authorized Representative: Michelle Zehnder Fischer, County Attorney Nicollet County Attorney's Office 501 South Minnesota Avenue St. Peter, Minnesota 56082 (507) 934-7890 michelle.zehnderfischer@co.nicollet.mn.us	**Grant Contract Agreement Amount:** Original Agreement $70,000.00 Matching Requirement $0.00
State's Authorized Representative: Kelley Brim, Grant Manager Office of Justice Programs 445 Minnesota Street, Suite 2300 St. Paul, MN 55101-2139 (651) 283-3818 Kelley.brim@state.mn.us	**Federal Funding:** CFDA/ALN: 16.575 **FAIN:** 15POVC-22-GG-00764-ASSI **State Funding**: None **Special Conditions**: Attached and incorporated into this grant agreement. See page 3.

Under Minn. Stat. § 299A.01, Subd 2 (4) the State is empowered to enter into this grant contract agreement.

Term: The creation and validity of this grant contract agreement conforms with Minn. Stat. § 16B.98 Subdivision 5. Effective date is the date shown above or the date the State obtains all required signatures under Minn. Stat. § 16B.98, Subdivision 7, whichever is later. Once this grant contract agreement is fully executed, the Grantee may claim reimbursement for expenditures incurred pursuant to the Payment clause of this grant contract agreement. Reimbursements will only be made for those expenditures made according to the terms of this grant contract agreement. Expiration date is the date shown above or until all obligations have been satisfactorily fulfilled, whichever occurs first.

The Grantee, who is not a state employee, will:
Perform and accomplish such purposes and activities as specified herein and in the Grantee's approved Crime Victim Services 2024 Application ("Application") which is incorporated by reference into this grant contract agreement and on file with the State at 445 Minnesota Street, Suite 2300, St. Paul, Minnesota, 55101-2139. The Grantee shall also comply with all requirements referenced in the Crime Victim Services 2024 Guidelines and Application which includes the Terms and Conditions and Grant Program Guidelines (https://app.dps.mn.gov/EGrants), which are incorporated by reference into this grant contract agreement.

Budget Revisions: The breakdown of costs of the Grantee's Budget is contained in Exhibit A, which is attached and incorporated into this grant contract agreement. As stated in the Grantee's Application and Grant Program Guidelines, the Grantee will submit a written change request for any substitution of budget items or any deviation and in accordance with the Grant Program Guidelines. Requests must be approved prior to any expenditure by the Grantee.

Matching Requirements: (If applicable.) As stated in the Grantee's Application, the Grantee certifies that the matching requirement will be met by the Grantee.

***Payment*:** As stated in the Grantee's Application and Grant Program Guidance, the State will promptly pay the Grantee after the Grantee presents an invoice for the services actually performed and the State's Authorized Representative accepts the invoiced services and in accordance with the Grant Program Guidelines. Payment will not be made if the Grantee has not satisfied reporting requirements.

Certification Regarding Lobbying: (If applicable.) Grantees receiving federal funds over $100,000.00 must complete and return the Certification Regarding Lobbying form provided by the State to the Grantee.

1. ENCUMBRANCE VERIFICATION

Individual certifies that funds have been encumbered as required by Minn. Stat. § 16A.15.

Signed: _____

Date: 9/12/2023

3. STATE AGENCY

Signed: _____
(with delegated authority)

Title: County Attorney

Date: _____

Grant Contract Agreement No./ P.O. No. A-CVS-2024-NICCAO-047 / 3-90236

Project No.(*indicate N/A if not applicable*): N/A

2. GRANTEE

The Grantee certifies that the appropriate person(s) have executed the grant contract agreement on behalf of the Grantee as required by applicable articles, bylaws, resolutions, or ordinances.

Signed: _____

Print Name: Jack Kolars

Title: Board Chair - Nicollet County Board of Commissioners

Date: _____

Signed: _____

Print Name: Mandy Landkamer

Title: County Administrator/Clerk to the Board

Date: _____

Signed: _____

Print Name: _____

Title: _____

Date: _____

Distribution: DPS/FAS
Grantee
State's Authorized Representative

Special Conditions

1. Special Duties:

$70,000 for prosecutor based crime victim services in Nicollet County.

Budget Summary

Budget				
Budget Category	**Federal**	**State**	**Match**	
Personnel				
Full Time Victim/Witness Coordinator Position	$70,000.00	$0.00	$0.00	
Total	$70,000.00	$0.00	$0.00	
Total	$70,000.00	$0.00	$0.00	

AUGUST 22, 2023
OFFICIAL PROCEEDINGS OF THE
NICOLLET COUNTY DRAINAGE AUTHORITY

The Nicollet County Drainage Authority met in regular session on Tuesday, August 22, 2023 after the adjournment of the regular Board of Commissioners meeting. Present at the meeting were Commissioners Jack Kolars, Marie Dranttel, Mark Dehen, and Kurt Zins. Commissioner Morrow was excused. Also present were County Administrator Mandy Landkamer, County Attorney Michelle Zehnder Fischer and Recording Secretary Sarah Frahm.

Approval of Agenda

Motion by Commissioner Dranttel and seconded by Commissioner Dehen to approve the agenda, with the removal of the CD 83 Hippert Driveway Relocation Project quote. Motion carried with all voting in favor on a roll call vote.

Consent Agenda

Motion by Commissioner Dehen and seconded by Commissioner Zins to approve the consent agenda items as follows:

1. August 8, 2023 Regular Drainage Minutes

Motion carried with all voting in favor on a roll call vote.

Public Appearances

There were no public appearances.

Adjourn

The meeting was adjourned at 9:25 a.m.

DRAFT

JACK KOLARS, CHAIR
BOARD OF COMMISSIONERS

ATTEST:

MANDY LANDKAMER,
CLERK TO THE BOARD

Nicollet County Drainage Authority Meeting Agenda Item

Agenda Item:
Status Update for CD 83 Hippert Driveway Relocation Project

Primary Originating Division/Dept.: Public Works-Drainage Ditches

Meeting Date: 09/12/2023

Contact: Seth Greenwood, P.E. Title: PWD/County Engineer

Item Type: (Select One) Regular Agenda

Amount of Time Requested 10 minutes

Presenter: Seth Greenwood & Nate Henry Title: PWD/County Engineer

Attachments: ○ Yes ◉ No

County Strategy: (Select One) Facilities and Space - preserve, maintain and build our assets

BACKGROUND/JUSTIFICATION:

Request for quotes were set for the end of the business day of August 25, 2023 for the CD 83 Hippert Driveway Relocation Project. No quotes were submitted by the deadline date and time. Staff will discuss potential next steps at the September 12, 2023 Drainage Authority meeting.

Supporting Documents: ○ Attached ○ In Signature Folder ◉ None

Prior Drainage Authority Action Taken on this Item: ○ Yes ◉ No

If yes, when? (provide year; mm/dd/yy if known)

Approved by County Attorney's Office: ○ Yes ○ No ◉ N/A

ACTION REQUESTED:

FISCAL IMPACT: (Select One) Other

If "Other", specify

FTE IMPACT: (Select One) No FTE change

If "Increase or "Decrease" specify:

Related Financial/FTE Comments:

FUNDING
Drainage Authority Dollars =

Grant
(Select One)

Total

Nicollet County Drainage Authority Meeting Agenda Item

Agenda Item:
CD30A & CD32A Cleaning Request

Primary Originating Division/Dept.: Public Services

Meeting Date: 09/12/2023

Contact: Jaci Kopet Title: PPSP Director

Item Type: (Select One) Regular Agenda

Amount of Time Requested 25 minutes

Presenter: Nathan Henry Title: Ditch Inspector

Attachments: (•) Yes ( ) No

County Strategy: (Select One) Programs and Services - deliver value-added quality services

BACKGROUND/JUSTIFICATION:

Attached are two repair requests from landowners to clean a portion of the open ditch on CD30A and CD32A. Nathan Henry, Nicollet County Ditch Inspector, will present the repair requests.

Landowners have been notified that these repair requests were coming before the Drainage Authority at approximately 10:00 am. Although not required by drainage law, I am asking the Drainage Authority to hear any public input pertaining to these cleanings due to the potential financial impact to the landowners.

Supporting Documents: (•) Attached ( ) In Signature Folder ( ) None

Prior Drainage Authority Action Taken on this Item: ( ) Yes (•) No

If yes, when? (provide year; mm/dd/yy if known)

Approved by County Attorney's Office: ( ) Yes ( ) No (•) N/A

ACTION REQUESTED:

The Drainage Authority will be asked to approve or deny the repair requests

FISCAL IMPACT: Other
(Select One)

If "Other", specify

FUNDING
Drainage Authority Dollars =

Grant
(Select One)

FTE IMPACT: No FTE change
(Select One)

Total

If "Increase or "Decrease" specify:

Related Financial/FTE Comments:

NICOLLET COUNTY EST. 1853

Office of Public Works
Highways and Parks
Drainage Systems and Agricultural Inspection

Seth M. Greenwood, P.E.
Public Works Director/County Engineer

Date: 7-13-2023

Repair Request

TO: Nicollet County Board of Commissioners

The undersigned represent and state:

1. That they are the owners of lands within the watershed of, and affected by Judicial/County

   Ditch No. CD 30-A

2. That said ditch is in need of repairs as follows:

   Clean the open ditch as shown on the attached map.

3. This request is not intended to be a formal petition under Chapter 103E of Minnesota Statutes, but merely to furnish information as to repairs we believe to be needed.

4. We the undersigned do hereby consent to having the requested repairs done at any time convenient to the Nicollet County Drainage Authority.

WHEREFORE, your petitioners request that the said County Drainage Authority will investigate this matter and take such measures as they deem necessary to repair said ditch.

Brett Sigg
John Kuehn
Chris Kuehn

X Thomsen Family Farms
by Rick Thomsen
Michael Olson

I hereby recommend to the Nicollet County Board of Commissioners that a ditch hearing be set.

Date: 8-4-23

Signed: [signature]
Nicollet County Ditch Inspector

Approved for Repairs by Nicollet County Drainage Authority:

Date_____ Signed Authority Chair_____

Public Works Department
1700 Sunrise Drive, St. Peter, MN 56082
Telephone 507-931-1760
seth.greenwood@co.nicollet.mn.us

Providing efficient services with innovation and accountability.

CD 30A proposed cleanout

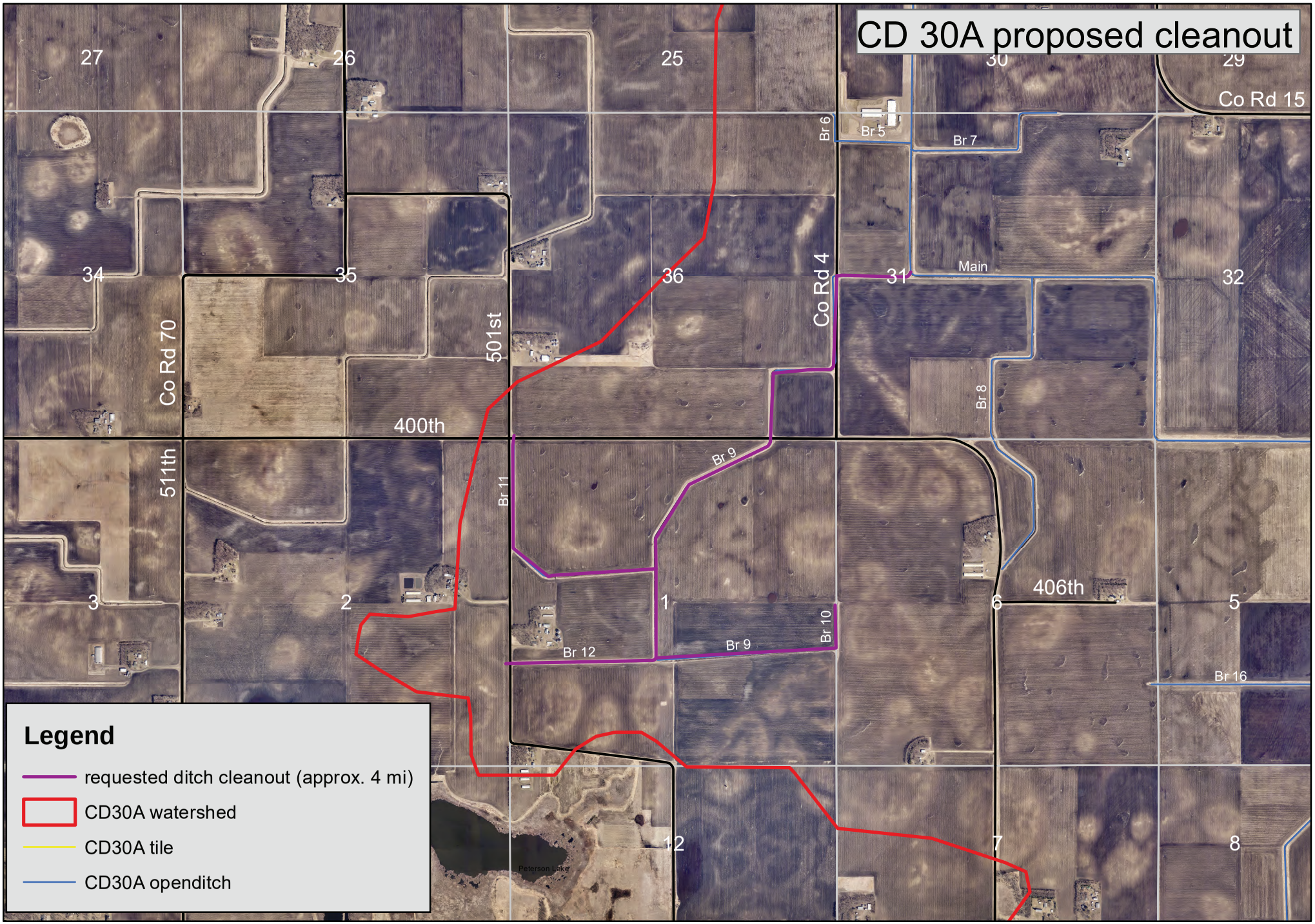

N

0 0.175 0.35 0.7 Miles

This drawing is neither a legally recorded map nor a survey and is not intended to be used as one.
This drawing is a compilation of information from various sources and is to be used for reference purposes only.
Nicollet County Public Works - Ditch Department is not responsible for any inaccuracies herein contained.
If discrepancies are found please contact Nicollet County Public Works Dept. at 507 931-1760

NICOLLET COUNTY EST. 1853

Author: Nathan A. Henry
Date: 8/25/2023

NICOLLET COUNTY EST. 1853

Office of Public Works
Highways and Parks
Drainage Systems and Agricultural Inspection

Seth M. Greenwood, P.E.
Public Works Director/County Engineer

Date: 7-13-2023

Repair Request

TO: Nicollet County Board of Commissioners

The undersigned represent and state:

1. That they are the owners of lands within the watershed of, and affected by Judicial/County

   Ditch No. CD 32-A.

2. That said ditch is in need of repairs as follows:

   Clean the open ditch as shown on the attached map.

3. This request is not intended to be a formal petition under Chapter 103E of Minnesota Statutes, but merely to furnish information as to repairs we believe to be needed.

4. We the undersigned do hereby consent to having the requested repairs done at any time convenient to the Nicollet County Drainage Authority.

WHEREFORE, your petitioners request that the said County Drainage Authority will investigate this matter and take such measures as they deem necessary to repair said ditch.

X Randy Gerlach

Rick Thomas

Wayne Schoen

I hereby recommend to the Nicollet County Board of Commissioners that _____

Date: _____ Signed: _____
Nicollet County Ditch Inspector

Approved for Repairs by Nicollet County Drainage Authority:

Date_____ Signed Authority Chair_____

Public Works Department
1700 Sunrise Drive, St. Peter, MN 56082
Telephone 507-931-1760
seth.greenwood@co.nicollet.mn.us

Providing efficient services with innovation and accountability.

CD 32A proposed cleanout

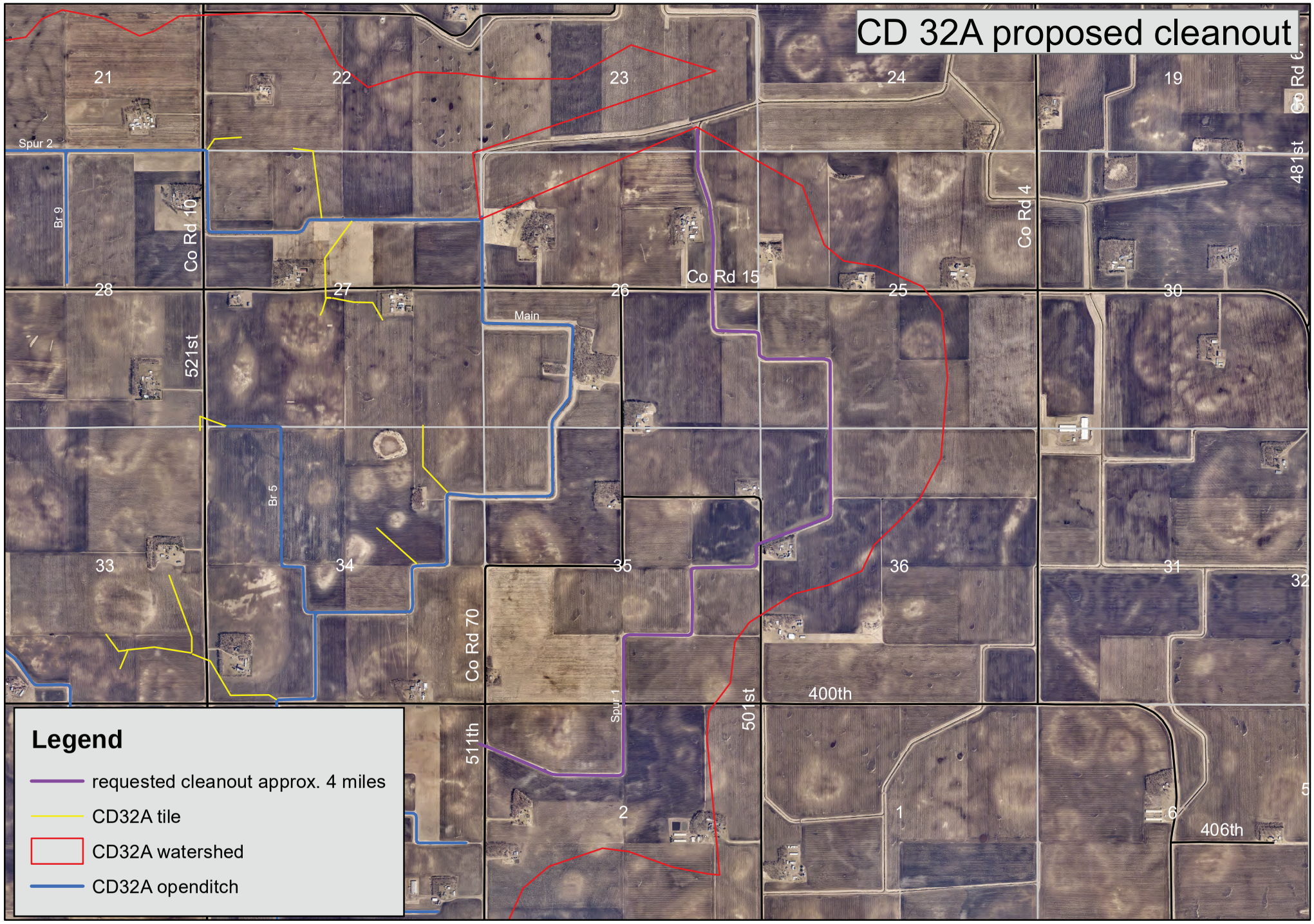

N

0 0.225 0.45 0.9 Miles

This drawing is neither a legally recorded map nor a survey and is not intended to be used as one.
This drawing is a compilation of information from various sources and is to be used for reference purposes only.
Nicollet County Public Works - Ditch Department is not responsible for any inaccuracies herein contained.
If discrepancies are found please contact Nicollet County Public Works Dept. at 507 931-1760

NICOLLET COUNTY EST. 1853

Author: Nathan A. Henry
Date: 8/25/2023